Cabinet system aprack



... the perfect shell for valuable electronics

www.apra.de



Your direct line

+49 (0) 65 92 / 204-0

aprack® electronics cabinet

from page 7

- Components 10
- Accessories 17

You can find other cabinet systems for industrial use and data centre here:

www.apranet.de



19" cabinet system TiRAX





19" cabinet system NETcell

the all-purpose cabinet

aprack®





Sample configurations

19" aprack cabinet system

- elegant design
- rack can be assembled very quickly (8 screws)
- 19" mountings with adjustable mounting depth
- light aluminium construction
- various accessories
- available with subdivided rear door with 3 U installation space, for installing plug-in units or fan modules, or for cable entry
- doors with turning lever lock
- numerous assembly options for extension components due to fixing notches in the extrusions
- free assembly service, also for custom configurations of extension and accessory parts

Specifications

Application:
cabinet system for installing 19" plug-in units, 19" subracks, shelves, etc. suitable for office and laboratory use such as measurement and testing technology or for audio / video appliaction as well as industrial use.

Construction:
sturdy aluminium extrusion frame with aluminium die-cast corners

Finish:
cabinet: RAL 7035 light grey
frame: RAL 7011 iron grey

Standards: dimensions acc. to IEC 60297-3-100

Degree of protection: IP 20

Delivery: assembled

Individual configuration:

Design your own customised cabinet.
Select your required cabinet components one at a time.

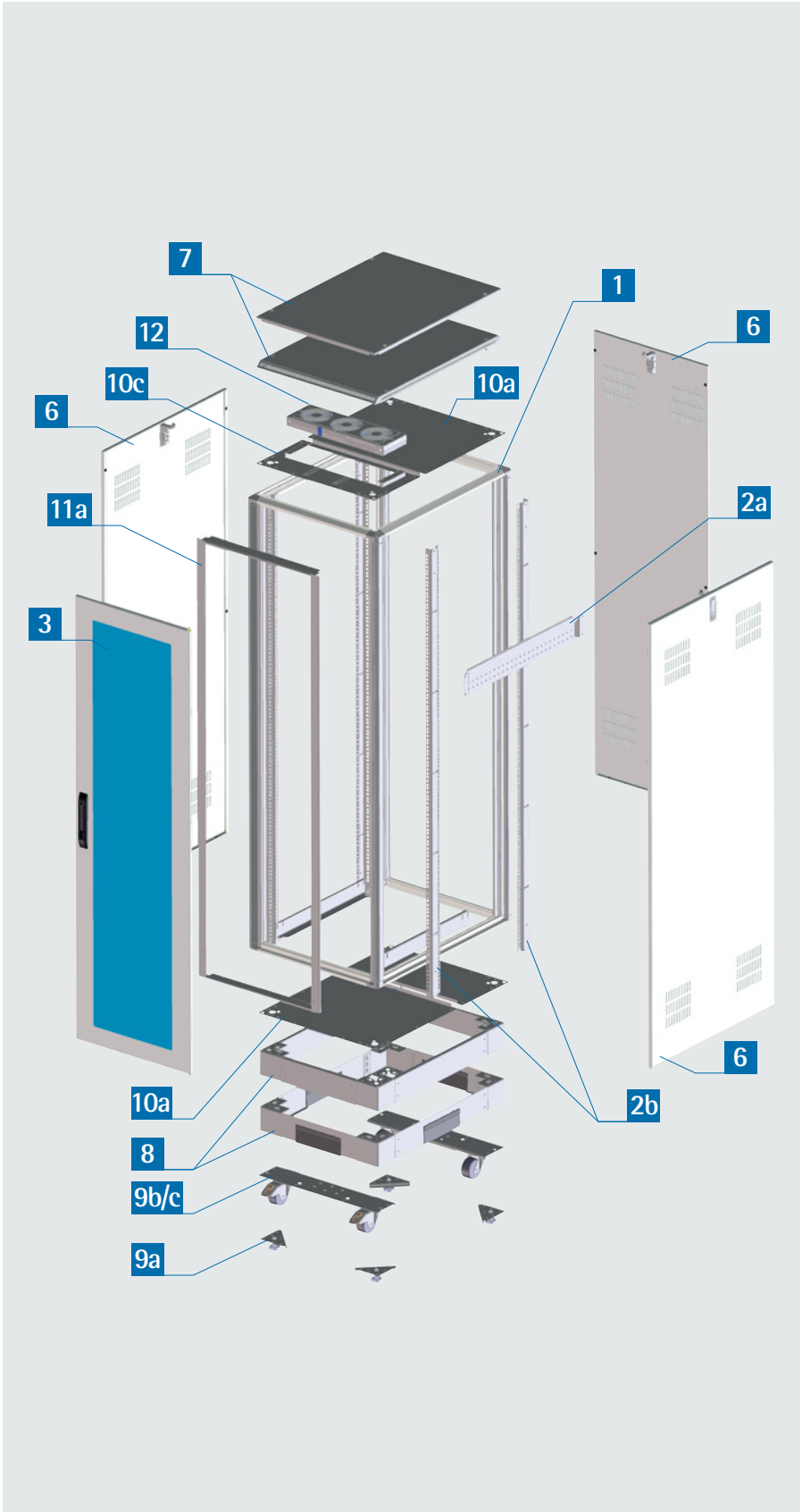

Pos.	Description	page
1	Rack	11
2a	Tie-bar	11
2b	Vertical mounting (ASA)	11
3	Safety glass door	12
4	Door, solid (without fig.)	12
5	Short door, solid (without fig.)	12
6	Side / rear panel, ventilated	13
7	Top cover ventilated / solid	13
8	Base ventilated / solid / with cable entry	14
9a	Adjusting feet, set	14
9b	Castor set Ø 100 mm	14
9c	Castor set Ø 66 mm	14
10a	Cover plate, solid	15
10b	Cover plate for cable entry (without fig.)	15
10c	Cover plate for fan module	15
11a	Blind cover set for cabinets with recessed vertical mountings	16
11b	Blind panel set for cabinets with vertical mountings in the standard position	16
12	Basic fan module	20

www.apra.de

1 Rack (mounted)

Material: aluminium extrusion
Finish: RAL 7011 iron grey

U describes maximum mounting height!

Scope of delivery

Pc.	Description
1	Bottom frame
1	Top frame
4	Vertical extrusions (19" vertical mountings not included)

H mm	U	W mm	D mm	Order no.
600	11	600	800	111-036
800	16	600	600	111-038
800	16	600	800	111-138-00
1000	20	600	600	111-040
1000	20	600	800	111-140
1200	25	600	600	111-042
1200	25	600	800	111-142-00
1600	34	600	600	110-316
1600	34	600	800	110-326
1800	38	600	600	110-318
1800	38	600	800	110-328
2000	43	600	600	110-320
2000	43	600	800	110-330

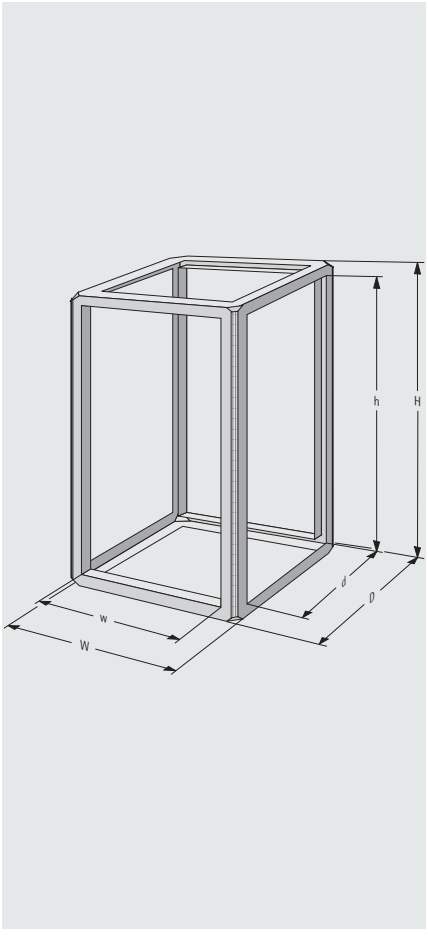

2a Tie-bar

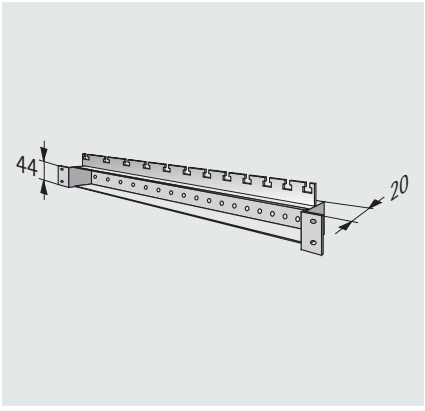

- for variable installation of 19" vertical mountings inside 600 mm wide cabinets
- can be used as cable management bracket

Material:
sheet metal 2 mm
Finish:
galvanised

D mm	Order no. (1 piece)
600	110-089
800	110-090

2b Vertical mounting, ASA

- incl. assembly material

Material:
sheet metal 2 mm
Finish:
galvanised

The vertical mountings 12 U and 15 U are meant to be used for partly 19" extension level.

H mm	U	Order no. (pair)
600	11	110-070-50
-	12	110-101-50
-	15	110-102-50
800	16	110-080-50
1000	20	110-090-50
1200	25	110-100-50
1600	34	110-103-50
1800	38	110-104-50
2000	43	110-105-50

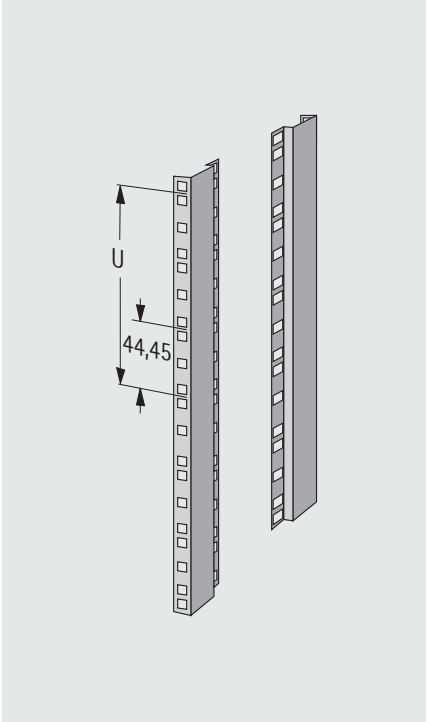

Label for vertical mounting, ASA



- label for vertical mounting, ASA
- self-adhesive
- 1-55 U division
- can be cut to height

Order no.
316-120-91

3 Glass door



- can be used as front or rear door
- clear safety glass 4 mm
- swing handle with push button
- profile semi-cylinder (optional)

Material:
sheet metal 1,5 mm
Finish:
RAL 7035 light grey

H mm	U	W mm	Order no.
800	16	600	110-570-08
1000	20	600	110-570-10
1200	25	600	110-570-12
1600	34	600	110-570-16
1800	38	600	110-570-18
2000	43	600	110-570-20

4 Door, solid

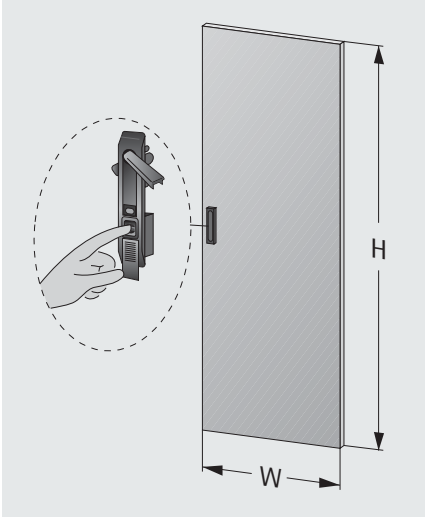

- can be used as front or rear door
- swing handle with push button
- profile semi-cylinder (optional)

Material:
sheet metal 1 mm
Finish:
RAL 7035 light grey

H mm	U	W mm	Order no.
600	11	600	110-251-00
800	16	600	110-253
1000	20	600	110-255-00
1200	25	600	110-254
1600	34	600	110-271
1800	38	600	110-272
2000	43	600	110-274

5 Short door, solid

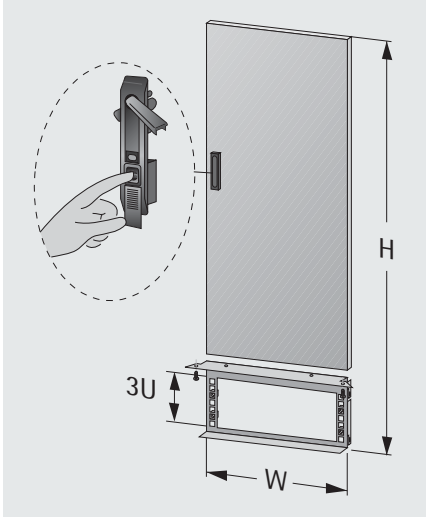

- can be used as front or rear door
- swing handle with push button
- profile semi-cylinder (optional)
- 3 U installation frame (under door or above) included

Material:
sheet metal 1 mm
Finish:
RAL 7035 light grey

Cable entry on page 23!

H mm	U	W mm	Order no.
1600	34	600	110-634-00
1800	38	600	110-635-00
2000	43	600	110-636-00

Profile semi-cylinder

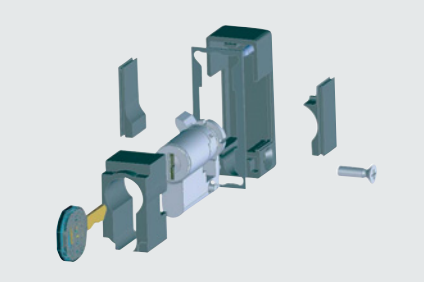

- profile semi-cylinder with lock EK333 for swing handle
- useable for positions 3, 4 and 5 in exchange of push button

Order no.
676-316-00

www.apra.de

6 Side / rear panel, ventilated

- can be used as side or rear panel
- with lock EK 333

Material:
sheet metal 1 mm
Finish:
RAL 7035 light grey

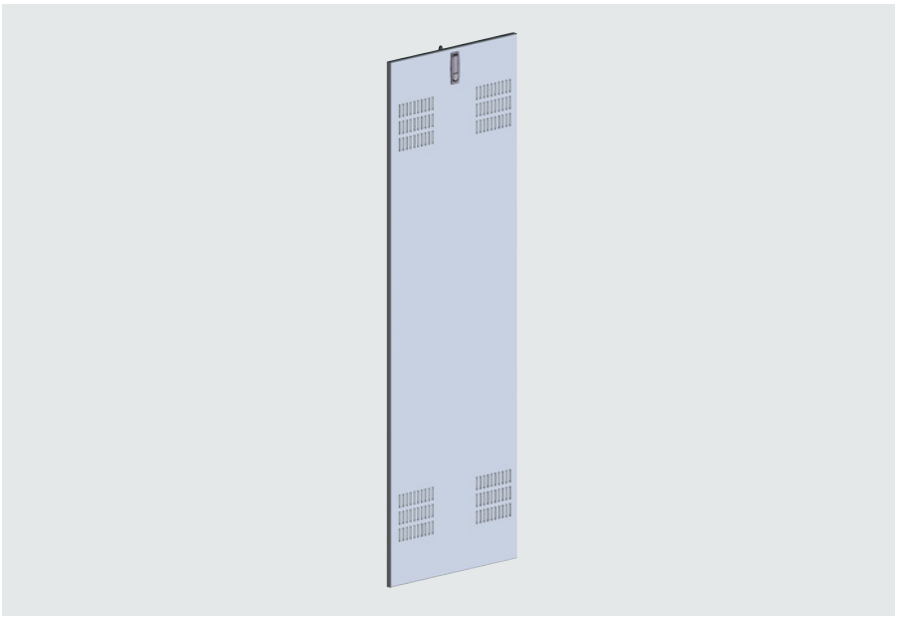

H mm	W/D mm	Order no.
600	600	111-116
	800	110-193-10
800	600	111-118
	800	110-194-00
1000	600	111-120
	800	110-195-00
1200	600	111-122
	800	110-196-00
1600	600	110-184
	800	110-190
1800	600	110-185
	800	110-191
2000	600	110-186
	800	110-192

7 Top cover

- ventilated (H=25mm) or closed (flat)

Material:
aluminium 1,5 mm
Finish:
RAL 7035 light grey

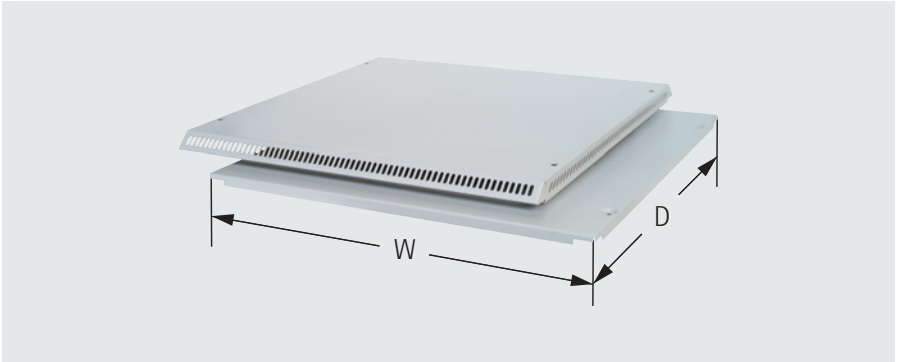

W mm	D mm	Description	Order no.
600	600	closed	110-051-20
		with side ventilation slots	110-060-00
	800	closed	110-052-20
		with side ventilation slots	110-061-00

www.apra.de

9a Adjusting feet (4 pcs.)

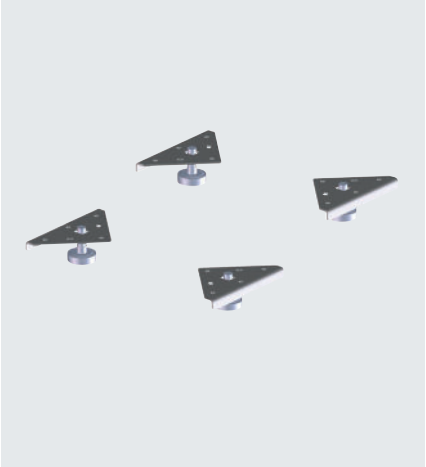

- incl. base plate and assembly material
- to attach to the rack 1 or the base 8
- set = 4 pieces

Material:
holding plate: sheet metal 2,5 mm
Finish:
galvanised

Description	Order no. (set)
mounted on rack	110-012
mounted on base	318-026-02

9b Castor set Ø 100 mm



- fastened directly to the cabinet
- castor diameter: d=100 mm
- carrying capacity per castor: 100kg in total: 300 kg max.
- cabinet height + 118 mm
- with brake (2x)
- set = 4 castors

Material:
holding plate: sheet metal 2,5 mm
Finish:
galvanised

Order no.
110-603-20

9c Castor set Ø 66 mm

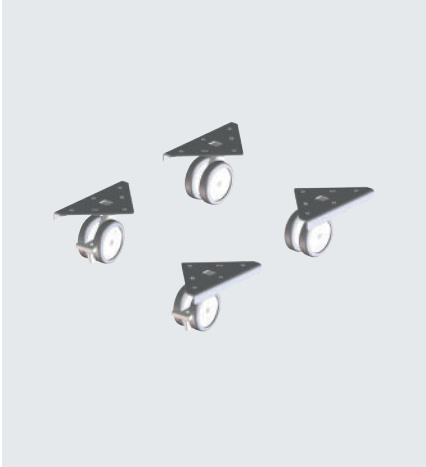

- fastened directly to the cabinet
- castor diameter: d=66 mm
- carrying capacity per castor: 70 kg, in total: 210 kg max.
- cabinet height + 82 mm
- with brake (2x)
- set = 4 castors

Material:
holding plate: sheet metal 2,5 mm
Finish:
galvanised

Order no.
110-603-10

www.apra.de

10 Cover plates

- cover plates to cover the top or bottom openings

The following cover plate combinations (sizes 1, 4 and 5) are possible:

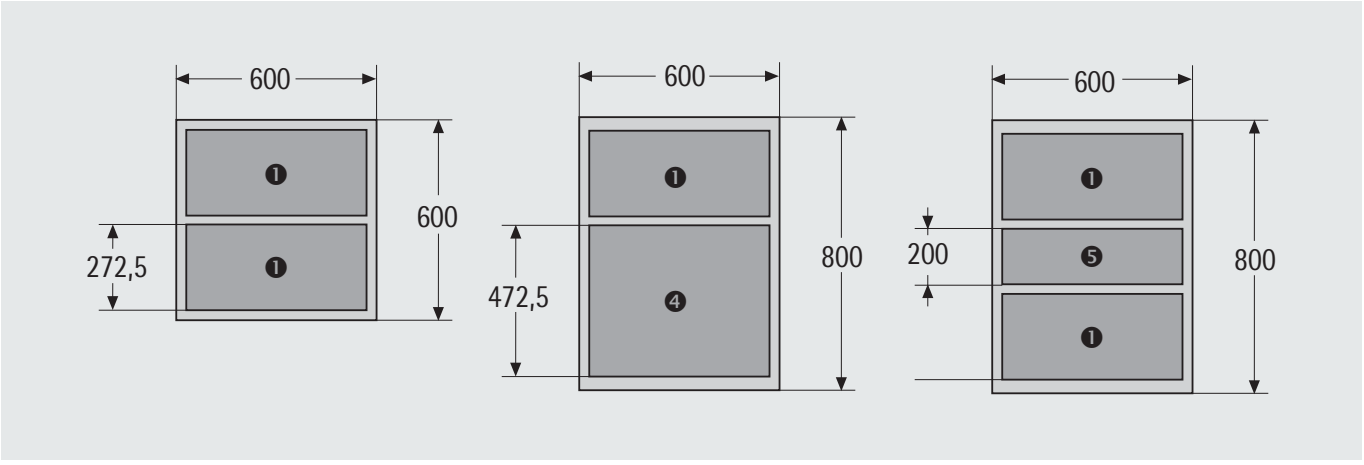

10a Cover plate, solid



Material:
sheet metal 1,5 mm
Finish:
RAL 7035 light grey

Size	Order no.
1	110-700-00
4	110-703-00
5	110-714-00

10b Cover plate for cable entry



Material:
sheet metal 1,5 mm
Finish:
RAL 7035 light grey

Size	Order no.
1	110-711-00

10c Cover plate for fan module



- for mounting of fan modules 12

Material:
sheet metal 1,5 mm
Finish:
RAL 7035 light grey

Size	Order no.
1	110-708-10

11a Blind cover set for cabinets with recessed vertical mountings

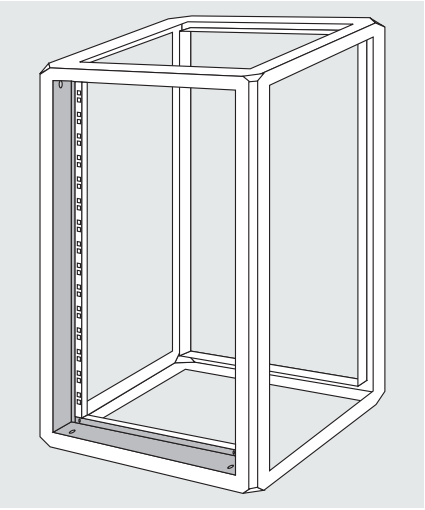

- for masking the opening between the vertical mountings and rack
- for cabinets with 32 mm recessed vertical mountings
- distance between glass door and front plate = 62 mm

Material:
aluminium 2 mm
Finish:
RAL 7011 iron grey or
RAL 7035 light grey

Scope of delivery

Pc.	Description
2	Panels, vertical
2	Panels, top/bottom
	Assembly material

H mm	Colour	Order no.
600	RAL 7035	110-406-50
	RAL 7011	110-406-02
800	RAL 7035	110-408-00
	RAL 7011	110-408-02
1000	RAL 7035	110-410-00
	RAL 7011	110-410-02
1200	RAL 7035	110-412-00
	RAL 7011	110-412-02
1600	RAL 7035	110-416-00
	RAL 7011	110-416-02
1800	RAL 7035	110-418-00
	RAL 7011	110-418-02
2000	RAL 7035	110-420-00
	RAL 7011	110-420-02

11b Blind cover set for cabinets with vertical mountings in the standard position

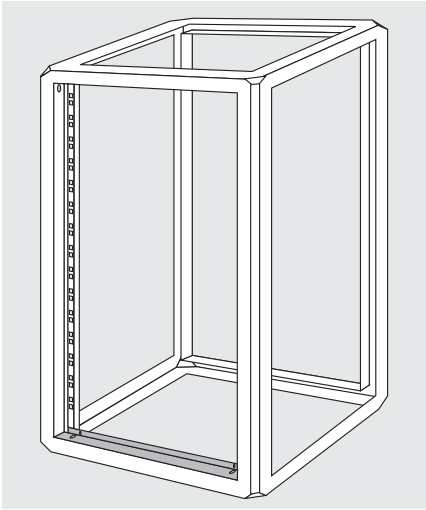

- for masking the opening between the vertical mountings and rack
- for cabinets with vertical mountings in the standard position
- distance between glass door and front plate = 30 mm

Material:
aluminium 2 mm
Finish:
RAL 7011 iron grey or
RAL 7035 light grey

Scope of delivery

Pc.	Description
2	Panels, top/bottom
	Assembly material

H mm	Colour	Order no.
600	RAL 7035	110-407-00
	RAL 7011	110-407-05
800	RAL 7035	110-406-00
	RAL 7011	110-406-05
1000	RAL 7035	110-407-00
	RAL 7011	110-407-05
1200	RAL 7035	110-406-00
	RAL 7011	110-406-05
1600	RAL 7035	110-406-00
	RAL 7011	110-406-05
1800	RAL 7035	110-407-00
	RAL 7011	110-407-05
2000	RAL 7035	110-406-00
	RAL 7011	110-406-05

Earthing kit

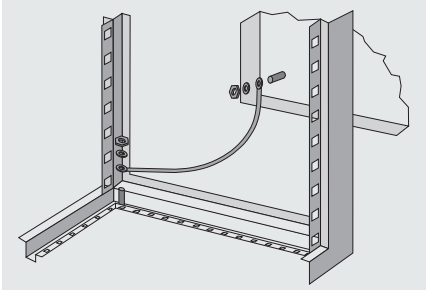

- allows an earthing of all cabinet components in compliance with VDE

Order no.
110-533-10

www.apra.de

Sliding rail, adjustable height

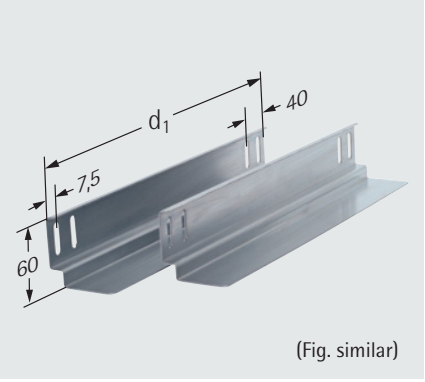

- for installing to a front or rear vertical mounting
- 1 pair
- incl. assembly material

Material:
sheet steel 1.5 mm
Finish:
galvanised

Cabinet depth (D)	d1 mm	Order no.
600	420	110-096
800	520	110-097
800	620	110-098

Sliding rail, hanging

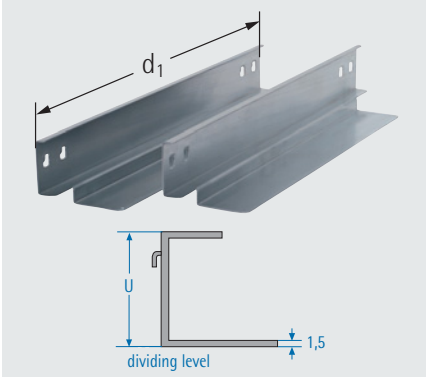

- to hinge into front or rear vertical mounting
- 1 pair
- not suitable to mount subracks

Material:
sheet steel 1.5 mm
Finish:
galvanised

The support surface for built-in plug-in units is 1.5 mm above the partition. Pay attention to the offset between the plug-in unit front plate and chassis.

Cabinet depth (D)	d1 mm	Order no.
600	400	110-086-10
800	500	110-087-00
800	600	110-088-10

Mounting plate

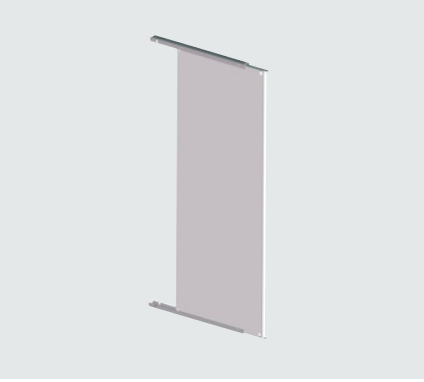

- for individual mounting of components (e.g. enclosures for top hat rail)
- to be mounted on the rack

Material:
sheet steel 2.0 mm
Finish:
galvanised

H mm	W mm	Order no.
800	600	110-107-08
1000	600	110-107-10
1200	600	110-107-12
1400	600	110-107-14
1600	600	110-107-16
1800	600	110-107-18
2000	600	110-107-20

M5 screw set (50 pieces)

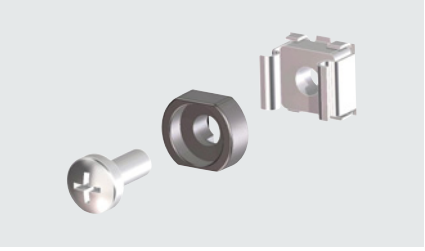

- required for installing 19" components in cabinets or enclosures
- included in delivery:
  - 50 screws, M 5 x 12
  - 50 captive nuts, M 5-8
  - 50 decorative washers, M 5

Order no.
630-991

M6 screw set (50 pieces)

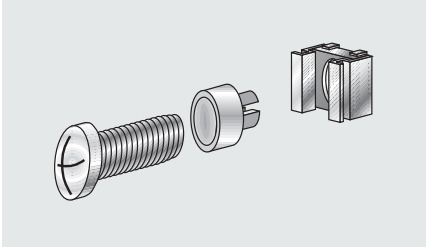

- required for installing 19" components in cabinets or enclosures
- included in delivery:
  - 50 screws, M 6 x 16
  - 50 captive nuts, M 6-8
  - 50 decorative washers, M 6 with collar

Order no.
630-994

Spring nut, M5 (50 pieces)

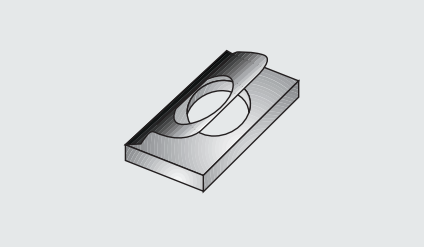

- for sliding into the profile grooves of the rack 1
- included in delivery:
  50 pieces M5

Order no.
630-015-50

19"-shelf 1 U "VARIplain" with 19" mounting

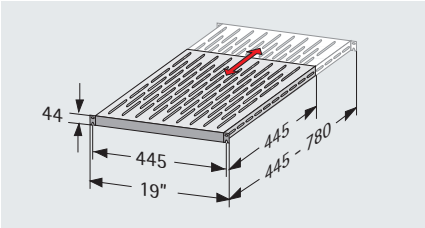

- fixed mounting
- depth variable due to VARIplain technology
- telescopic: 445 - 780 mm (see figure)
- easy one-man installation due to open long hole in the 19" front (hinged)

Material:
sheet metal 2 mm
Finish:
RAL 7035 light grey
Load capacity:
150 kg (distributed load)

Order no.
316-036-99

Shelf 1 U for cabinets with 19" mounting, extractable, 1,5 U

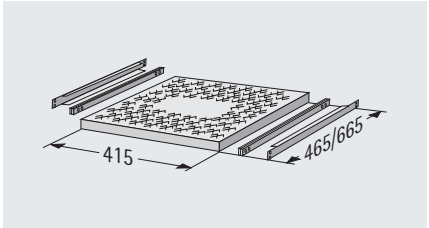

- extractable
- ventilated
- high quality telescopic rails with maximum extension, hold-in and disconnect
- includes assembly material
- mounting to 19" level
- Space requirement (height) approx. 1.5 U

Material:
sheet metal 1,5 mm
Finish:
RAL 7035 light grey
Load capacity:
approx. 40 kg

D mm	d mm	Order no.
600	465	110-876-10
800	665	110-877-12

Shelf 1 U for cabinets without 19" mounting, 1,5 U

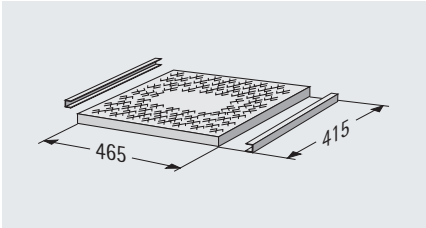

- fixed installation or extractable (high quality telescopic rails with maximum extension, hold-in and disconnect)
- for depths D=600 mm and D=800 mm
- ventilated
- includes assembly material
- can only be mounted to the rack
- Space requirement (height) approx. 1.5 U

Material:
sheet metal 1,5 mm
Finish:
RAL 7035 light grey
Load capacity:
approx. 40 kg

Description	Order no.
fixed	110-870-10
extractable	110-873-10

Shelf, for cabinets with only one 19" vertical level

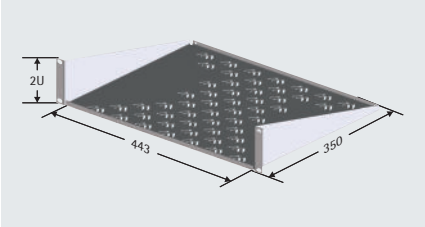

- fixed installation
- mounts easily onto the front or rear 19" mounting brackets
- ventilated
- incl. assembly material

Material:
sheet metal 1,5 mm
Finish:
RAL 7035 light grey
Load capacity:
15 kg

U	Order no.
2	315-810-20
3	315-810-00

www.apra.de

19" plastic cover panel 1U

- air separation function
- visual upgrade of the rack by concealing free 19" surfaces
- stylish design due to rounded front surface of the panel
- short assembly time: the blind panel is easily clipped into the 19" grid without tools
- can be removed and reinserted at any time and without tools
- protection against dust entry
- fire protection classification to UL 94 V-0
- weigth-saving in comparison to customary metal panels

Material:
Lexan 920, flammability rating acc. to UL94V-0, RoHS compliant

Finish:
RAL 7016 anthracite grey or
RAL 7035 light grey
Delivery:
set = 10 pieces
set = 136 pieces



RAL 7016 anthracite grey RAL 7035 light grey

Colour	Delivery	Order no.
RAL 7016 anthracite grey	Set = 10 pieces	213-156-25
RAL 7035 light grey	Set = 10 pieces	213-156-30
RAL 7016 anthracite grey	Set = 136 pieces	213-156-40
RAL 7035 light grey	Set = 136 pieces	213-156-45

19" cover panel, sheet metal

Material:
sheet metal 1,5 mm
Finish:
RAL 7035 light grey or
RAL 9005 jet black
Dimensions (H x W x D):
1-4 U x 482,6 x 10 mm



RAL 7035 light grey RAL 9005 jet black

U	Colour	Order no.
1	RAL 7035 light grey	213-156-00
	RAL 9005 jet black	213-156-10
2	RAL 7035 light grey	213-158-00
	RAL 9005 jet black	213-158-10
3	RAL 7035 light grey	213-159-00
	RAL 9005 jet black	213-159-10
4	RAL 7035 light grey	213-160-00
	RAL 9005 jet black	213-160-10

12 Basic fan module

- unrivalled light weight
- budget-priced
- simple mounting
- genius modularity – registered design
- suitable for all applications of enclosures and cabinet technology
- long lifetime and reliability due to high-class fans
- integrated fan cover
- highest flammability rating due to use of most modern plastics of classification UL 94V-0
- basic module: up to 3 fans 230 V
- speed-controlled basic module: 3 fans 12 V



Material:
polycarbonate UL 94 V-0
Finish:
RAL 9005 deep black
Dimensions (H x W x D):
44 x 450 x 140 mm

Power cords are not included in delivery - please order separately!

Description	Description	Voltage V	Air flow rate m³/h	Order no.
fan module 1-fold	Basic module	230	160	230-500-01
fan module 2-fold	Basic module	230	320	230-500-02
fan module 3-fold	Basic module	230	480	230-500-03
fan module 3-fold	speed-controlled	12	up to 450	230-500-53

Power cord, standard



Connection	L mm	Order no.
earthed plug	3000	640-044-05
rubber connector	3000	230-500-15
without plug	3000	230-500-16

Power cord with thermostat



- with thermostat 0-60°C

Connection	L mm	Order no.
earthed plug	3000	230-500-04
rubber connector	3000	230-500-05
without plug	3000	230-500-06

Filter set for fan module

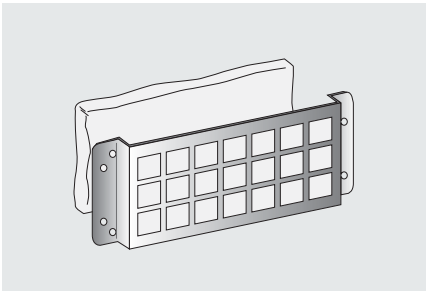

Material:
filter fleece / sheet metal 1 mm, galvanised

Order no.
316-100-99

www.apra.de

Installation set for fan module

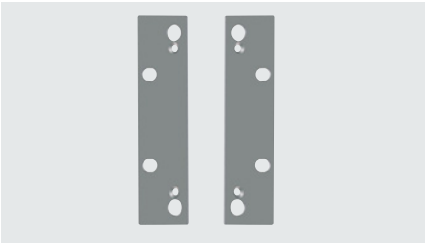

- 3U kit for installation of the fan modules 12 on a 19" shelf support

Material:
sheet steel 1.5 mm
Finish:
RAL 7035 light grey

Order no.
230-500-24

19" temperature indicator / regulator module 1U



- the module is equipped with a temperature indicator and temperature sensor
- mounting material included (excl. power cord)
- temperature indicator range: -20°C to 99°C
- regulator adjustment range: -20°C to 70°C
- operating voltage: 230 V
- switch contacts, zero volt: 250 V, 8 A (2x)
- connection: terminal strip

Material: sheet steel 1,5 mm/ plastics
Finish: RAL 7035 light grey

Order no.
213-148-00

Thermostat, 230V

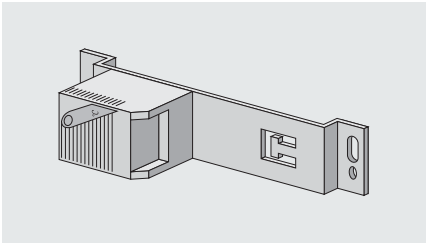

- with fixing bracket and integrated tension relief
- control range 0 – 60°C
- fixing to rack or 19" level
- incl. assembly material

Order no.
110-804

Multiple socket strips 1U

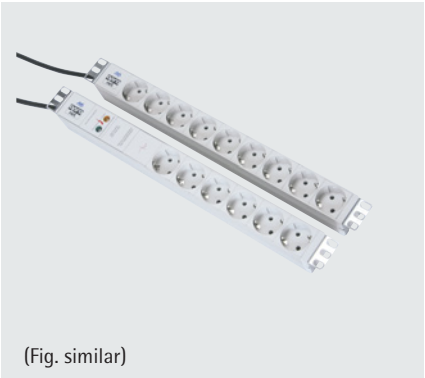

(Fig. similar)

- with 19" mounting brackets
- with overload protection
- VDE, CE, GS compliant
- earthed sockets and UTE standard sockets
- 230 V AC, 16 A

Colour:
RAL 7035 light grey

Description	Modules	Order no.
earthed	8 sockets	591-402-00
UTE	7 sockets	591-402-60

Handle set

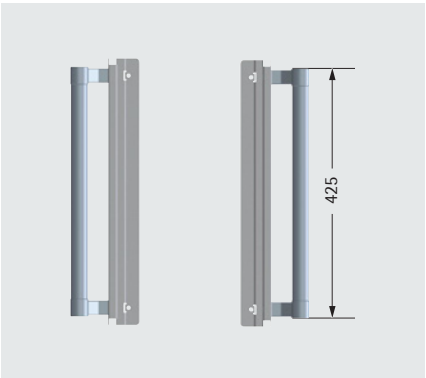

- well-designed handle set
- for a better handling of the rack
- flexible adjustment of height
- for lateral mounting on the rack 1

Material:
handle hold: aluminium anodised
fixing: sheet steel 1.5 mm
Finish:
fixing: RAL 7035 light grey

Order no.
110-715-20

TFT display bracket

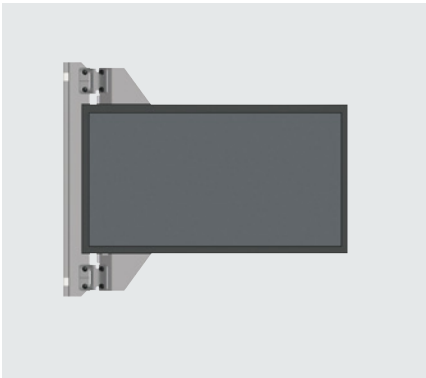

- easy assembly of TFT displays on the rack
- adjustable via friction hinge
- delivery without TFT monitor

Material:
sheet steel 1.5 / 2.0 mm
Finish:
RAl 7035 light grey

Order no.
110-012-06

19" cable guide panel 1 U / 2 U with metal hoops



- for clear and neat horizontal cable routing in the 19" level
- incl. 4 cable hoops with movable plastic locks

Material / Finish:
panel: sheet steel 1.5 mm, RAL 7035 light grey or RAL 9005 deep black
cable hoops: sheet steel, chrome-plated
locks: Lexan 920 (flammability acc. to UL94 V-0, RoHS compliant)
Dimensions (H x W x D):
44/88 x 482,6 x 90 mm

U	Colour	Order no.
1	RAL 7035	213-145-41
1	RAL 9005	213-145-42
2	RAL 7035	213-145-43
2	RAL 9005	213-145-44

19" cable guide panel 1 U with plastic hoops

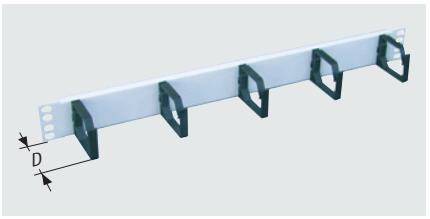

- for clear and neat horizontal cable routing in the 19" level
- incl. 5 cable hoops with assembly material

Material:
panel: sheet steel 1.5 mm
cable hoops: plastics, black
Finish:
RAL 7035 light grey or
RAL 9005 deep black
Dimensions (H x W x D):
44 x 482,6 x 60 mm

Colour	Order no.
RAL 7035	213-145-00
RAL 9005	213-145-30

19" switch panel, plastic 1 U



- for clear and neat horizontal cable routing in the 19" level
- weight-saving in comparison to traditional metal panels
- fire protection classification to UL94 V-0

Material:
plastic (polyamide)
Finish:
black (similar to RAL 9005)
Dimensions (H x W x D):
44 x 482,6 x 66 mm

Order no.
213-145-80

19" cable guide panel 1 U with velcro® strips

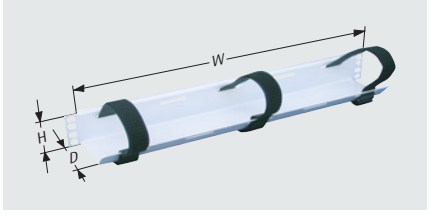

- for clear and neat horizontal cable routing in the 19" level with velcro® fixing
- incl. 3 velcro® strips and assembly material

Finish:
RAL 7035 light grey or
RAL 9005 deep black
Dimensions (H x W x D):
44 x 482,6 x 90 mm

Colour	Order no.
RAL 7035	213-161-00
RAL 9005	213-161-10

19" cable routing panel with cover panel 1 U / 2 U



- for clear and neat horizontal cable routing in the 19" level
- with adjustment options
- removable front panel

Material:
sheet steel 1.5 / 2.0 mm
Finish:
RAL 7035 light grey
RAL 9005 deep black
Dimensions (H x W x D):
44/88 x 482.6 x 100 mm

U	Colour	Order no.
1	RAL 7035	213-145-65
1	RAL 9005	213-145-95
2	RAL 7035	213-145-68
2	RAL 9005	213-145-98

19" cable duct 1 U with brush

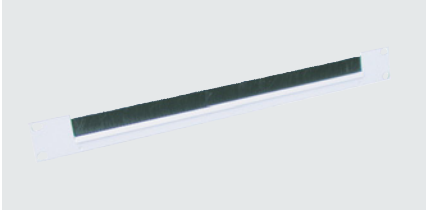

- for cable access behind the 19" mounting
- mounting to 19" level

Material:
sheet steel 1.25 mm/ plastics
Finish:
RAL 7035 light grey
RAL 9005 deep black
Dimensions (H x W x D):
44 x 482.6 x 12 mm

Colour	Order no.
RAL 7035	213-146-00
RAL 9005	213-146-10

www.apra.de

"Universal" cable clip set

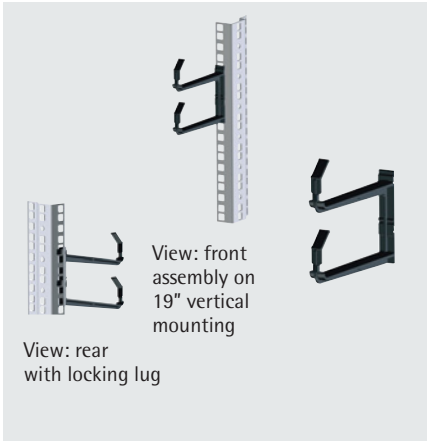

- to clip into 19" standard vertical mounting
- set = 10 pieces

Material:
plastics, black

Order no.
640-030-35

Cable hoop, metal

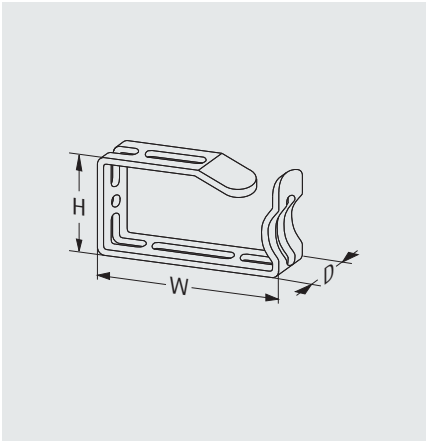

- for positioning cables vertically to the 19" level

Dimensions (H x W x D) mm	Order no.
47 x 85 x 23	640-036-27
66 x 125 x 23	640-036-37
88 x 125 x 23	640-036-47

19" cable entry, 3 U

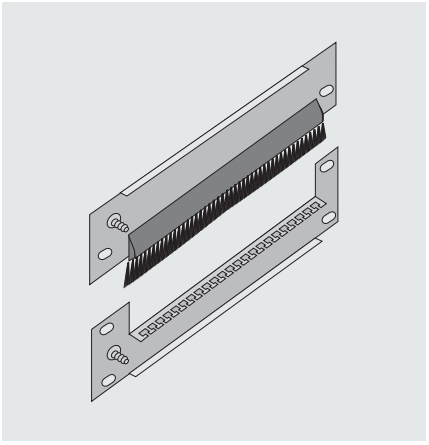

- with built-in cable management bracket and brush
- incl. assembly material

Material:
sheet steel 1.5 mm
Finish:
RAL 7035 light grey

The cable entry opening can be installed in the 3 U installation space underneath the short rear door.

Order no.
110-713-00

Potential equalisation bar

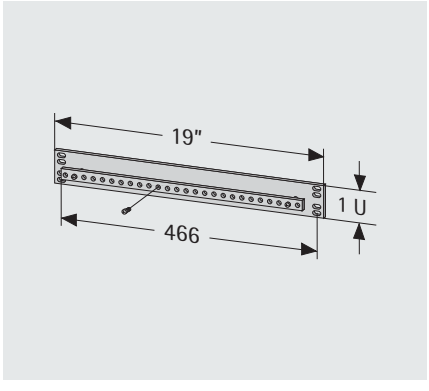

- for 19" or cabinet installation
- connection: 27 x M 5
- rail cross-section: 50 mm²

Material:
sheet steel / copper

Order no.
640-028-00

LED cabinet light



- cost-optimised LED technology with a power consumption of 5W (light intensity equivalent to a 75W light bulb)
- internal power supply unit with wide range voltage 100-230 V/ AC
- long-life and no maintenance (service life at 20°C = 60,000h)
- available with on/off switch or motion detector
- magnetic attachment for individual mounting in the cabinet

Connection sockets and connections must be ordered separately!

Description	Order no.
LED cabinet light with switch	640-143-05
LED cabinet light with motion detector	640-143-06
connecting socket without cord	640-143-07
connecting socket with EURO plug, l= 2.5m	640-143-08

Document pocket

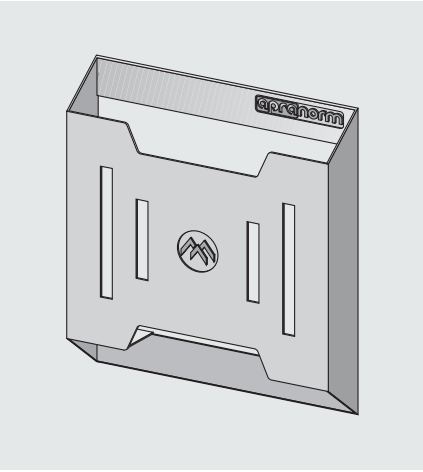

- self-adhesive
- heat-resistant to 60 °C
- your company's logo can be affixed

Material:
plastics, black
Load capacity:
3 kg

Order no.
640-100

CD holder for document pocket

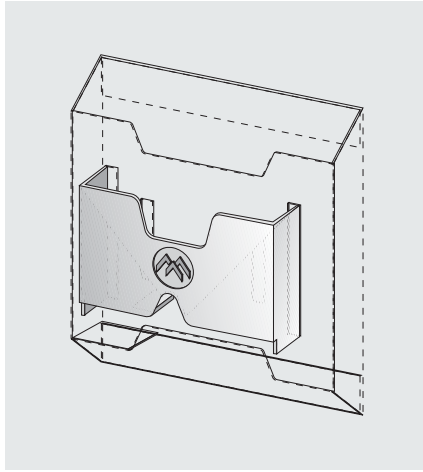

- practical supplement
- the CD/ diskette holder can be hung in the document pocket

Material:
aluminium 2.0 mm
Finish:
RAL 7035 light grey

Order no.
640-100-10

Mains socket

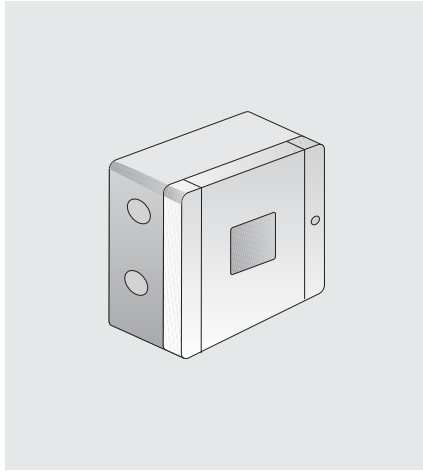

- cable distribution socket
- easy and quick assembly

Order no.
640-059

"Universal" velcro strip



- for quickly securing non 19" components
- length: 300 mm, width: 20 mm
- back to back mounting
- set = 10 pieces

Material:
velcro, black

Order no.
671-122-08

Velcro mount "universal"



- used to accommodate velcro up to w=20 mm
- for screws M4 (not included)
- set = 10 pieces

Material:
plastics, black

Order no.
583-001-08