apra net



Cabinet and enclosure solutions for data centres and networking technology


19" cabinet system TiRAX page 11


19" cabinet system NETcell page 65


Open 19" racks page 83


Floor-standing / wall-mounted 19" enclosure system VARi IT page 97


Wall-mounting systems page 111


Air conditioning technology page 129


Power distribution page 137


Cabinet monitoring page 155


Cable management page 163


Distribution technology page 169


Accessories page 177

Read more about the apra-group's products at www.apra.de


Compact PCI

1969 1979 1989 1999 2009 2017

WHAT MAKES US OUT?

LIVED VALUES FOR A STRONG COMMUNITY

As a family business with a long tradition, our company successes are based on a fixed value system. With a concentrated view on the global markets, we are always down-to-earth - we feel committed to our locations and are firmly anchored in our regions. Our strong passion for solutions forms the basis for targeted development services. At the same time it is our motivation and a permanent source of power. Not least our commitment to the highest quality products has made us a reliable and valued partner to our customers.

We work as a team. We weight cooperation. On this solid foundation, we enable our employees to use their high qualifications and their special abilities profitably for the benefit of our customers. A low fluctuation ensures that our individual employee know-how is maintained long term - a circumstance that also benefits our clients on a daily basis. Curiosity, ambition, perseverance and commitment are fundamental parameters that we bring to our daily work in a targeted manner in the interests of our customers. Proximity and the trusting relationship with our customers are just as important to us as partnership-based communication at eye level.

With this catalog, you get an impression of our performance. Together we would like to invite you to immerse yourself in our diverse product worlds. Achieving more together - that is the formula for success in times characterized by global markets.

We are convinced of that.

In this sense,
sincerely



Sabine Rademacher-Anschütz



Stefan Meffert

2018 2028 2038 2048 2058 2068 2078

WHAT IS OUR WAY?

FOCUSED ACTION FOR A SUSTAINABLE FUTURE

With sovereignty, we work day by day to expand our competence leadership. On the basis of a strong economic mindset, we commit ourselves to peak performance while remaining open to change. With goal-oriented ambition and great curiosity, our employees are breaking new ground to realize best-in-class solutions for our clients.

In order to cope with the demands of global market conditions, we have established continuous, progressive change processes throughout the company, which our employees take with them and are supported by them. Mechanisms such as these make us an attractive employer, which also offers a wide range of options for individual qualification. At the product level, we meet the demands placed on us and offer our customers the greatest possible variability through modular systems, individualized products and modified standards.

More information at:
www.apra.de/en/about/





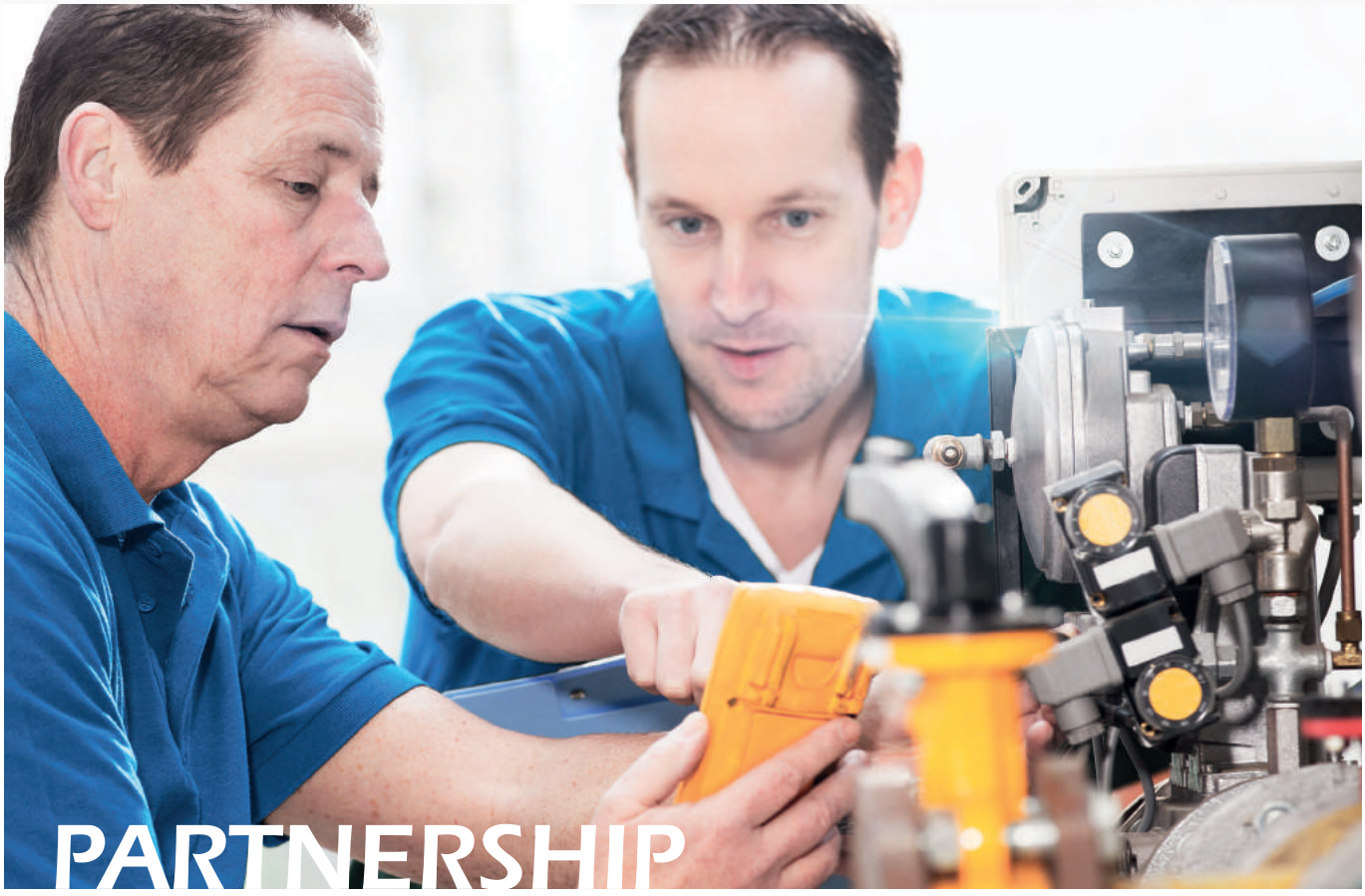
PARTNERSHIP





WHAT CAN WE DO?

ACCURATE SERVICES FOR SECURED ELECTRONICS

We have a very good reputation in the industry. Our name is internationally synonymous with quality products and services. To ensure that this remains in the future, we use it every day to underpin our competence leadership in all areas of the company. In all our efforts, we have retained the ability to think outside the box. With seismological precision, we compare developments on the international stage with our possibilities to initiate change processes if necessary.

- Secure processes as the basis for success
- Safe interaction between man and machine

Basically, we rely on the successful combination of motivated and committed employees and modern machinery. The process-reliable interaction of our qualified workforce with the innovative possibilities of technology is one of our unique selling points. In conjunction with our constructive know-how, we are able to realize products and electronic components that meet even the highest demands and set standards in terms of vertical integration and production range. The fact that we succeed in combining economic aspects and high quality is one of our key corporate features.

- High level of vertical integration
- High production range
- Economic aspects
- Highest quality

More information at:
www.apra.de/en

VERSATILITY COMPETENCE PROACTIVE PARTNER

WHAT IS YOUR ADVANTAGE?

COMMON SOLUTIONS FOR A STEADY IMPROVEMENT



Our efforts are aimed at generating added value. Against this background, we pursue a high degree of solution orientation and trust in doing so
on a foundation consisting of know-how, manufacturing and development competence. For our customers and suppliers, we are the reliable partner who works down-to-earth, serious and at eye level. Our actions are characterized by continuity and ambition.

- VERSATILITY | High production width and depth
- COMPETENCE | Qualified employees and a modern machinery guarantee the highest quality
- PRO-ACTIVE | Recognize and use opportunities
- PARTNERS | Personal interaction and a partnership relationship

Our knowledge of market and customer needs make us a valued partner. Due to our high manufacturing competence, we are able to respond quickly and flexibly to complex challenges - and not least because we completely map all processes from development to assembly.

More information at:
www.apra.de/en

apraNET YOUR PARTNER FOR DATACENTER

A STRONG PART OF THE APRA GROUP

The apra group develops and produces at three locations in Germany and employs over 400 people. apraNET uses the synergies of the apra group, which has been designing and manufacturing metal and plastic housings and cabinets for sensitive electronics for more than 50 years.

With their complex infrastructures, modern data centers place the highest demands on the cabinet and housing technology used: reliable processes, efficient, energy-saving climate control and a structured, fail-safe power distribution and cable management system are the key figures for high-caliber data center solutions.

For many years, apraNET has been developing sustainable systems together with well-known data center operators that optimally meet the requirements. With in-depth know-how and extensive practical experience, we deliver sophisticated 19 "solutions based on innovative products from the apra group.

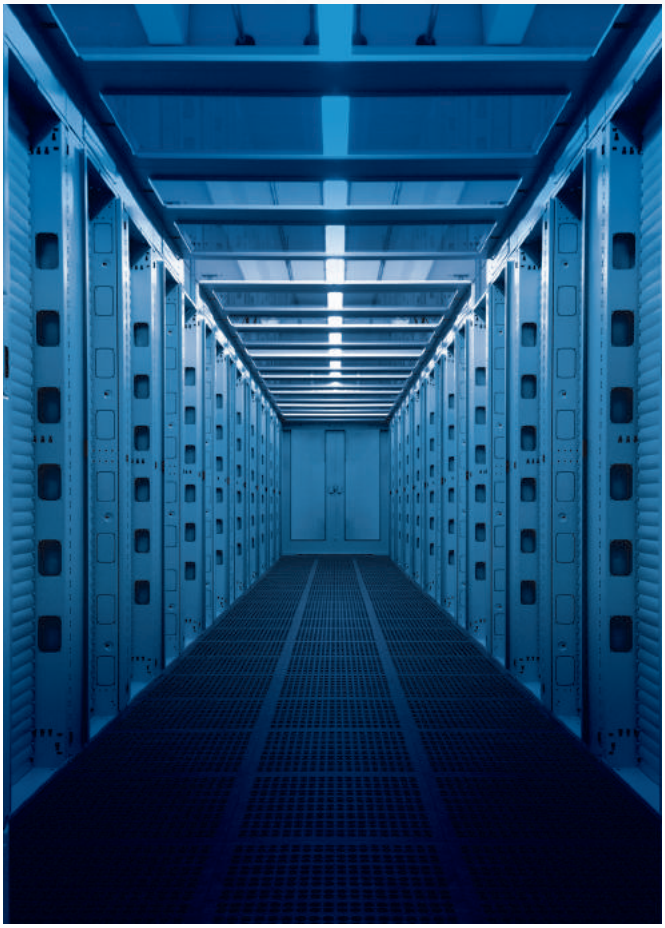

More information at:
www.apra.de/en

YOUR INDIVIDUAL DATA CENTER

IN 5 STEPS TO THE OPTIMAL SOLUTION

Experience, Consultancy, solution-driven and flexible:
As a full-service provider for data center solutions, we are reliable and with all our knowledge and experience always at your side, from planning and installation to after-sales service.

Initial setup of a data center:
Based on an on-site inventory and floor plan presented by you or your data center planner, we design your custom cabinet configuration and create a differentiated quotation. The concept takes into account all the items relevant to rack configuration: required capacity, number of cabinets, type of air conditioning and power distribution, cable management and accessories.

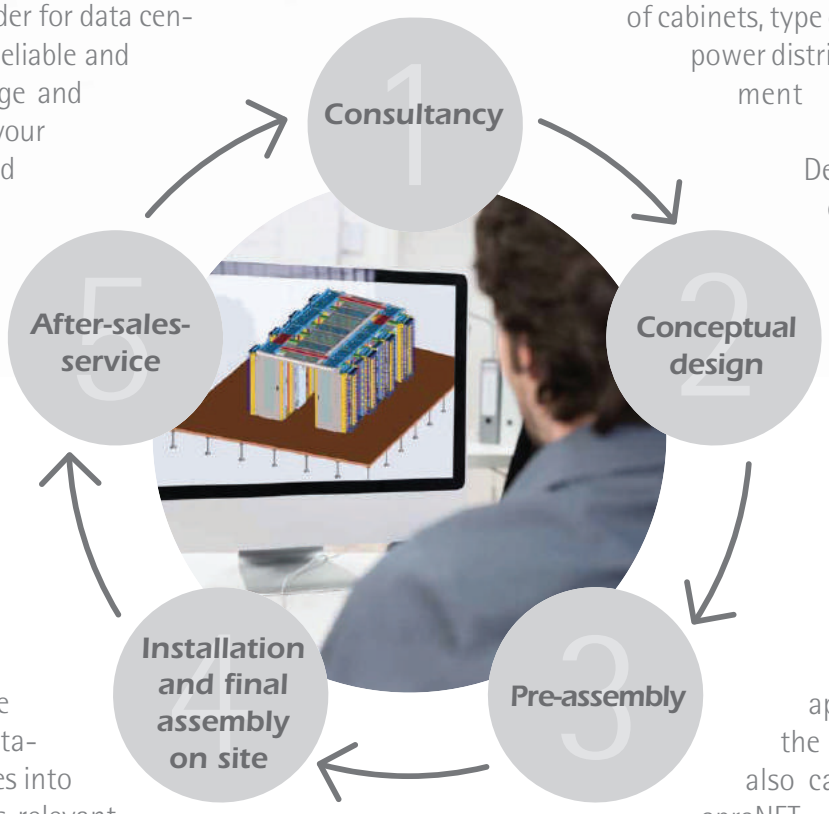

Depending on your specifications and the solution that has been agreed with you, your cabinets will be pre-assembled in our factory and, if required, on-time assembled by our technicians on site.

The integration of components from the apra cooling system or the apra power system is also carried out directly by apraNET.



19" cabinet system TiRAX	**page**	**11**
19" cabinet system NETcell	page	65
Open 19" racks	page	83
Floor-standing / wall-mounted 19" enclosure system VARi IT	page	97
Wall-mounting systems	page	111
Air conditioning technology	page	129
Power distribution	page	137
Cabinet monitoring	page	155
Cable management	page	163
Distribution technology	page	169
Accessories	page	177















Read more about the apra-group's products at www.apra.de

www.apra.de

TiRAX

THE OPTIMAL SOLUTION FOR CABLING IN THE IT AND INDUSTRIAL SECTOR

The "classic" 19 "cabinet system TiRAX comes as a server or network cabinet both individually and in Cabinet rows with enclosures for use. The TiRAX cabinet frame is designed as a rolled prefabricated construction based on just eight bolting points is easy to disassemble. With both force and form.

In addition to a very high degree of stability, a degree of protection of up to IP 54 is achieved. Thanks to its modular and fully symmetrical design, the TiRAX is not only popular with IT professionals, but also with innovative thinking and design-oriented technicians from the industry.

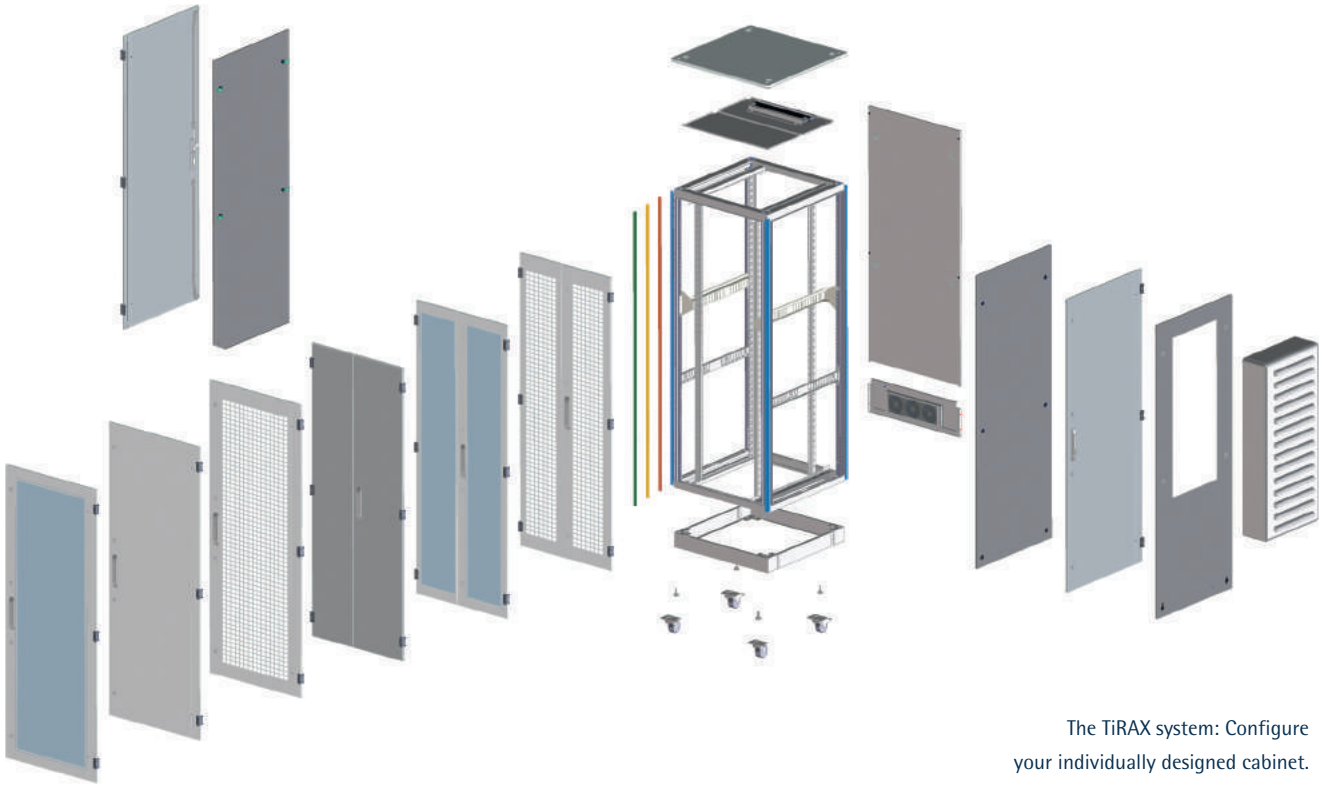

The TiRAX system: Configure your individually designed cabinet.

TiRAX Highlights

- completely demountable
- Extensive range of parts
- Individually configurable
- Fully symmetrical design
- detachable design profile, customer specific colour scheme
- Load capacity up to 1500 kg
- flexible Cabinet dimensions and modular interior design
- Energy efficient Air conditioning through the use of enclosure components
- Protection class up to IP 54

www.apra.de

Code your cabinets different colored design strips by applications or departments and give them one own look.





Passive ventilation through perforated metal doors (free Perforated plate cross section 83 %)

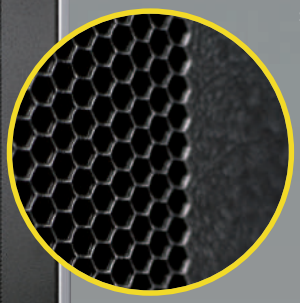

Swivel handle lock in mechanical or electronic version



Vertical cable routing on the side the 19 "level via cable clamp or cable channels



TiRAX

completely demountable,
modular,
fully symmetric

TiRAX server cabinet IP 20

- dismountable steel profile cabinet rack
- two lateral sash doors with quick lock mechanism
- front and rear perforated sheet metal door with three-point lock mechanism (perforated door surface: 83 %)
- installation of a profile half-cylinder possible
- 19" level 42 U, front and rear
- top panel with cable entry and/or fan module option
- base provided
- cover plates in the bottom area can be removed for cable entry
- for W = 800 mm: metal cable clamps 66 × 125 mm at the front 19" level (10 pieces)
- equipotential bonding set (installed)
- screw set M 5 (50×)

Finish:
Trim parts/base:
RAL 7035 light grey
Design profiles: RAL 5014 pigeon blue
(other colours possible on request)
or
Trim parts/base:
RAL 9005 jet black
Design profiles: RAL 7037 dusty grey
(other colours possible on request)
Delivery:
fully assembled, base provided









83% free perforation

H mm	W mm	D mm	Colour	Order no.
2000	600	1000	RAL 9005 jet black	318-200-60
2000	800	1000	RAL 9005 jet black	318-200-61
2000	600	1200	RAL 9005 jet black	318-200-62
2000	800	1200	RAL 9005 jet black	318-200-63
2000	600	1000	RAL 7035 light grey	318-200-64
2000	800	1000	RAL 7035 light grey	318-200-65
2000	600	1200	RAL 7035 light grey	318-200-66
2000	800	1200	RAL 7035 light grey	318-200-67

www.apra.de

TiRAX IP 20

- dismountable steel profile cabinet rack
- front viewing door with tinted toughened safety glass
- rear sheet metal door (can also be mounted as side door if basic size is square)
- both doors can accommodate a profile half cylinder
- side panels (connector cabinet: without side panels, includes cabinet connectors)
- 19" level front and rear
- for W = 800 mm: metal cable clamps 66 × 125 mm at the front 19" level
- top panel with cable entry and/or fan module option
- open bottom plate
- base provided
- equipotential bonding set (installed)
- screw set M 5 (50×)

Finish:
Trim parts/base:
RAL 7035 light grey
Design profiles:
RAL 3002 carmine red
(other colours on request)
Delivery:
fully assembled, base provided

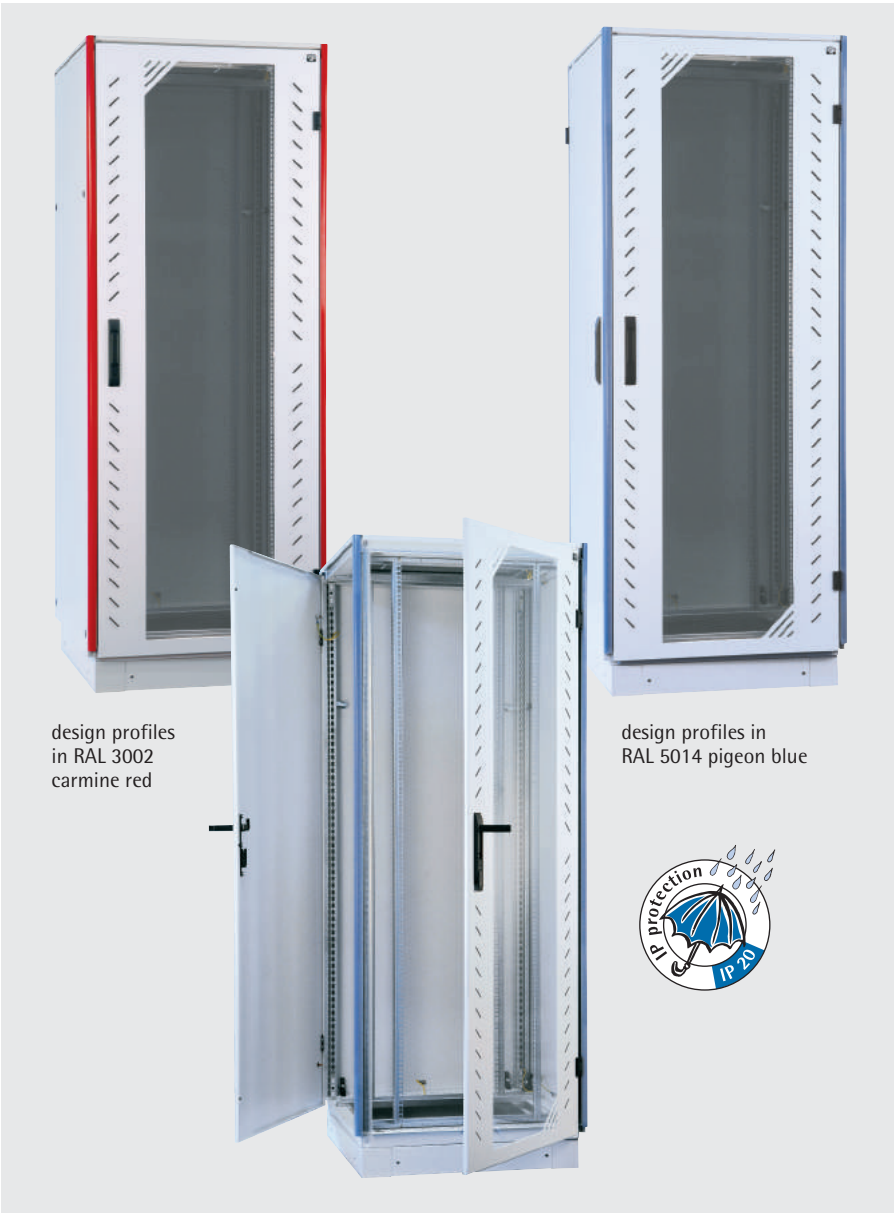

H mm	W mm	D mm	Basic cabinet	Connector cabinet
1200	600	600	317-200-40	317-200-50
1200	800	600	317-200-41	317-200-51
1200	600	800	317-200-42	317-200-52
1200	800	800	317-200-43	317-200-53
2000	600	600	317-200-44	317-200-54
2000	800	600	317-200-45	317-200-55
2000	600	800	317-200-46	317-200-56
2000	800	800	317-200-47	317-200-57

Configure your own individually designed cabinet.

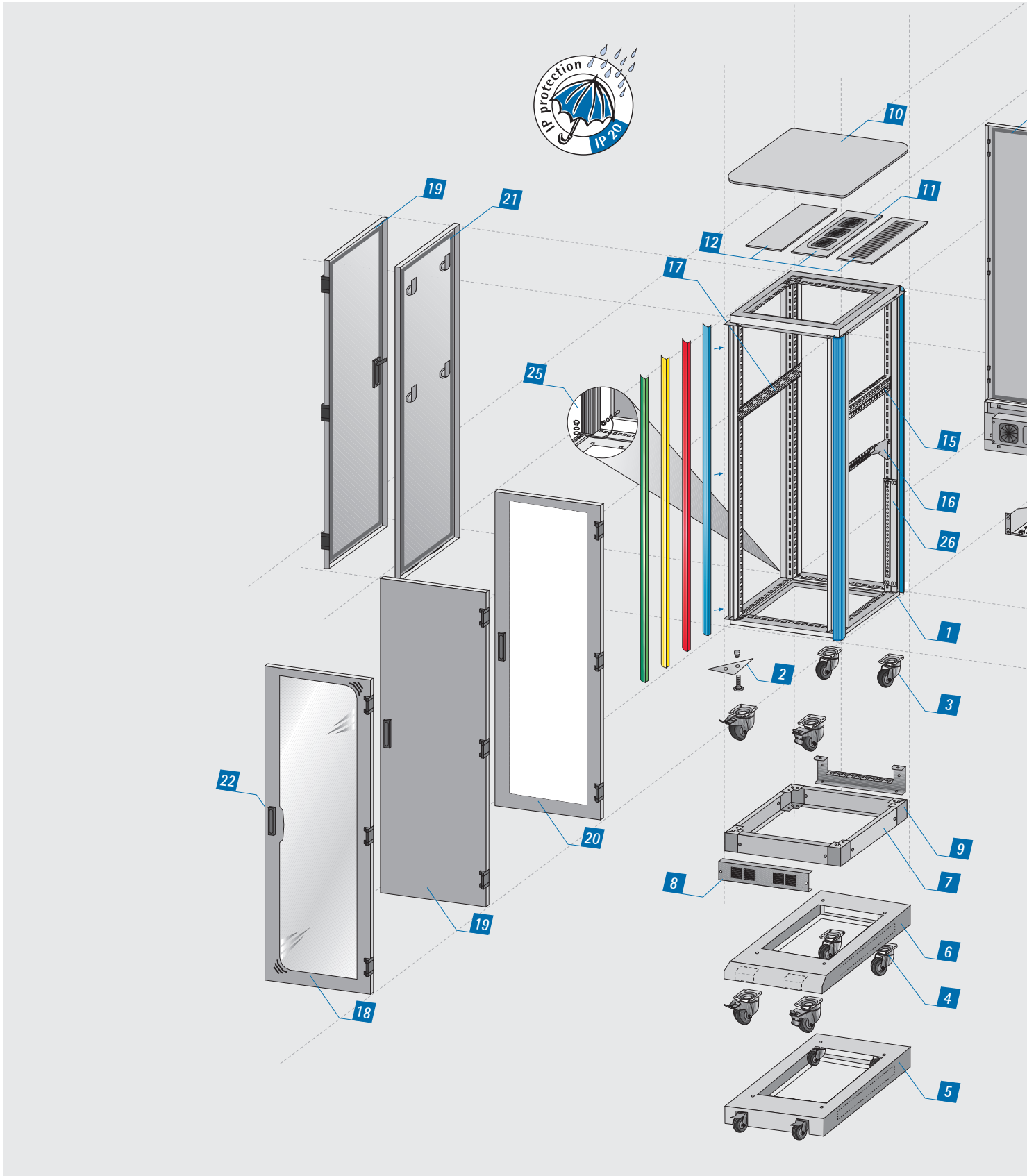

www.apra.de

Select the required cabinet components step by step:

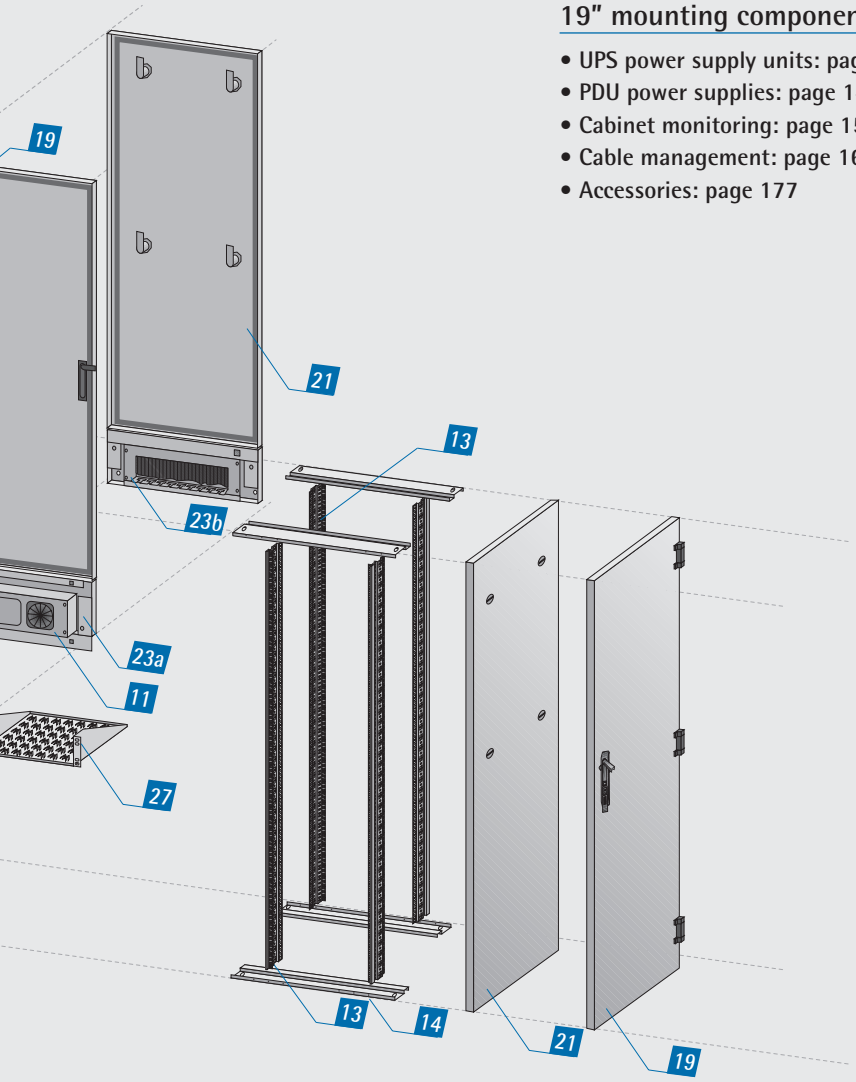

19" mounting components

- UPS power supply units: page 150
- PDU power supplies: page 140
- Cabinet monitoring: page 155
- Cable management: page 163
- Accessories: page 177

Pos.	Description	Page
1	Cabinet rack	18
2	Adjusting feet	18
3	Castor set	18
4	Castor set, tilt-prevention	18
5	Castor base	19
6	Tilt prevention base	19
7	Base covers	19
8	Filter set	19
9	Base corner set	19
10	Top	19
11	Fan module	20
12	Cover plates	22
13	19" vertical mounting	23
14	Cross bar for 19" integration	23
15	Multi-purpose crossbar	24
16	Reduction crossbar	24
17	Cable guarding rail	25
18	Viewing door	26
19	Door, solid	26
20	Door, perforated	26
21	Sash door	26
22	Locking system for doors	26
23a	Fan installation module	27
23b	Cable entry module	27
24	Cabinet connection set	27
25	Earhting set	27
26	Potential equalisation rail	29
27	Shelves	30

Technical information: max. 19" installation dimensions

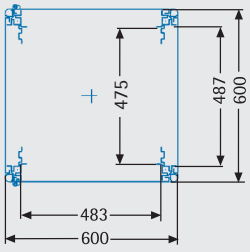

Top view cabinet rack
W x D = 600 x 600 mm

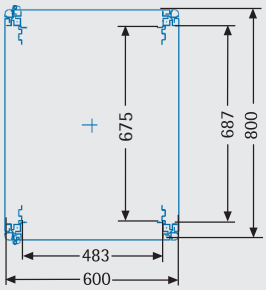

Top view cabinet rack
W x D = 600 x 800 mm

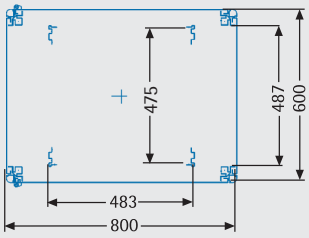

Top view cabinet rack
W x D = 800 x 600 mm

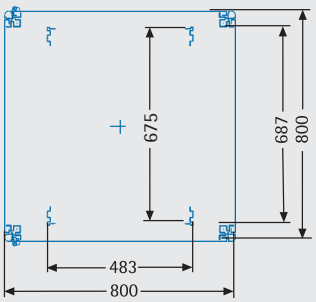

Top view cabinet rack
W x D = 800 x 800 mm

1 Cabinet rack, dismountable

The cabinet rack consists of two identical sheet metal frames **(1)**, four sheet metal functional profiles **(2)** and four painted sheet metal design profiles **(3)** clipped onto the functional profiles.

Dimensions:
W: Cabinet width
w: clear opening width
w = W - 146 mm
D: Cabinet depth
d: clear opening depth
d = D - 146 mm
H: Cabinet height
h: clear opening height
h = H - 100 mm

Finish:
(1) Top / bottom frame:
RAL 7035 light grey
(2) Functional profile: galvanised
(3) Design profile: RAL 5014 pigeon blue

Delivery:
fully assembled

The design profile **(3)** can be matched to your company colour if desired.

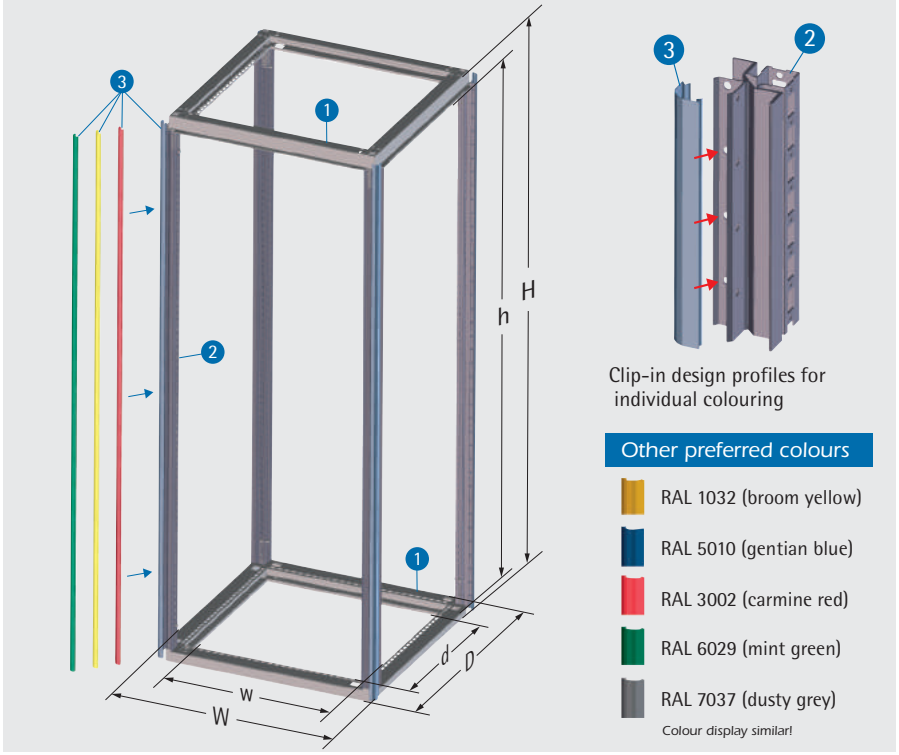

Dimensions (W x D) mm	U	H mm	Order no.
600 x 600	24	1200	318-660-02
800 x 600			318-860-02
800 x 800			318-880-02
600 x 1000			318-601-02
800 x 1000			318-810-02
600 x 600	42	2000	318-660-10
800 x 600			318-860-10
800 x 800			318-880-10
600 x 1000			318-610-10
800 x 1000			318-810-10

2 Adjusting feet

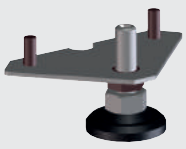

- to be screwed onto the rack (1) or to the corners of the base
- Height min. = 25 mm
- set = 4 pieces

Description	Order no.
Mounting on rack	318-026-00
Mounting on base	318-026-02

3 Castor set

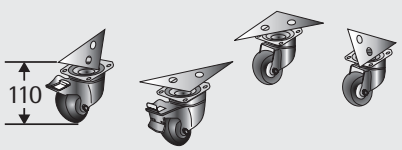

- to be screwed directly onto the cabinet rack (1)
- 4 swivel castors (2 with parking brake)

Load capacity:
450 kg

Order no.
318-026-10

4 Castor set, tilt prevention base

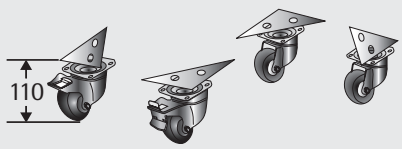

- to be screwed to tilt prevention base (6)
- 4 swivel castors (2 with parking brake)

Load capacity:
450 kg

Order no.
316-026-50

www.apra.de

5 Castor base

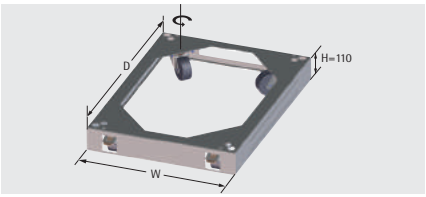

- 4 swivel castors (2 with parking brake)
- cable entry from rear (opening with brush) and side

Finish:
RAL 7035 light grey
Load capacity:
450 kg

W mm	D mm	Order no.
600	600	318-126-60
600	800	318-126-80
800	600	318-128-60
800	800	318-128-80

6 Tilt prevention base

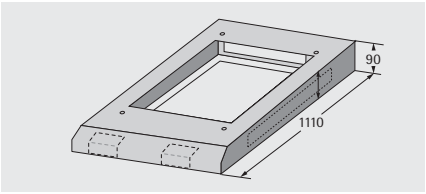

- static base with integrated tilt prevention
- offers secure standing when drawers with heavy equipment are extracted
- rear or lateral cable entry

Material:
sheet metal
Finish:
RAL 7035 light grey

W mm	D mm	Order no.
600	1000	318-026-11
800	1000	318-028-11

7 Base covers

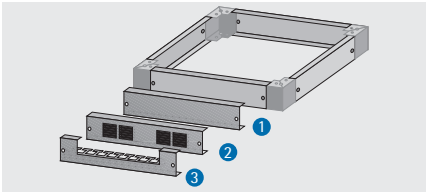

- for invidual base construction combined with our base corner set
- 4 covers complete one base

Type 1: solid
Type 2: ventilated
Type 3: with cable entry

Material: sheet metal
Finish: RAL 7035 light grey

W / D mm	Type	Order no.
600	1	318-100-10
800		318-100-20
1000		318-100-30
1200		318-100-50
600	2	318-100-12
800		318-100-22
600	3	318-100-14
800		318-100-24

8 Filter set for base covers

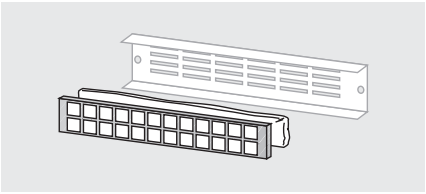

- matches base covers "Type 2 ventilated" (see pos. 7)

Material:
sheet metal galvanised, filter fleece

W / D mm	Order no.
600	318-100-16
800	316-101-99

9 Base corner set

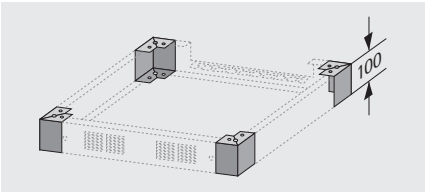

- set = 4 pieces
- includes mounting materials
- extendable
- Height: 100 mm

Material:
sheet metal
Finish:
RAL 7035 light grey

Order no.
318-100-00

10 Top

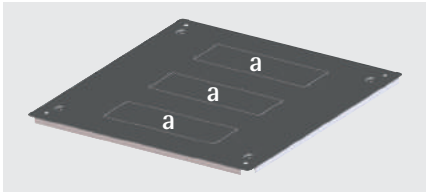

- can be raise mounted with lifting eye bolts (see below)
- for each pre-perforated field "a" extendable with **fan module** (see page 20) or **brush set** (see page 21)

Material: sheet metal
Finish: RAL 7035 light grey

Dimensions (W x D) mm	No. of fields (a)	Order no.
600 x 600	2	317-016-62
600 x 800	2	317-018-62
600 x 1000	2	317-020-64
800 x 600	2	317-018-62
800 x 800	3	317-018-82
800 x 1000	4	317-020-82

Filter set

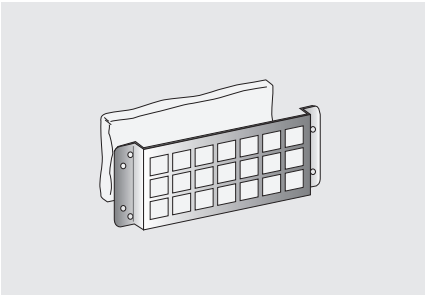

- for fan module or perforated cover plate

Material:
aluminium, filter fleece

Description	Order no.
Filter set	316-100-99
Spare filters (5 pieces)	671-200-05

Spacer bolts for top plates

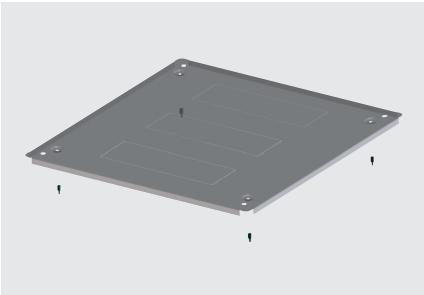

- The further lifting (H = 15 mm) of top panel is possible with additional spacer bolts.
- set = 4 pieces

Material:
steel

Order no.
316-016-65

Eye bolt kit

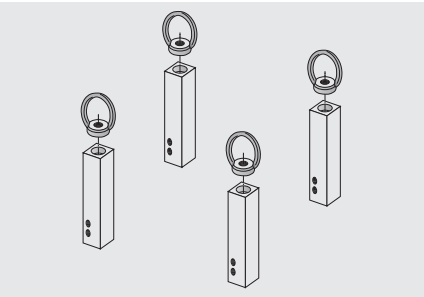

- lifting eye bolts for cabinet relocation
- set = 4 pieces

Load capacity:
500 kg

Order no.
318-026-20

11 Fan module



- fan module, fully pre-wired
- ventilation or extraction, depending on assembly position
- for installation in the top/bottom area of the cabinet
- different power cords available (see right side)

Material:
polycarbonate UL94 V-0
Finish:
similar to RAL 9005 jet black
Dimensions (H x W x D):
44 x 450 x 140 mm

The fan characteristics and noise levels can be found in the diagrams on page 133.

The fan module „silent" cannot be combined with an extension module!

Description	Unimpeded air flow	Basic module	Extension module
fan module 1-way	115 m³/h	230-500-01	230-500-11
fan module 2-way	230 m³/h	230-500-02	230-500-12
fan module 3-way	345 m³/h	230-500-03	230-500-13
fan module "silent"	240 m³/h	230-500-43	-

Power cord standard, 3 m

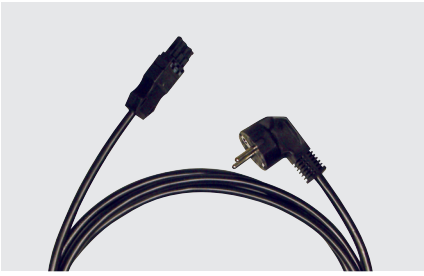

Connection	Order no.
Earthing-pin	640-044-05
IEC connector	230-500-15
Without plug for fixed connection	230-500-16

Power cord 3 m with thermostat 0 - 60 °C



Connection	Order no.
Earthing-pin	230-500-04
IEC connector	230-500-05
Without plug for fixed connection	230-500-06

www.apra.de

Roof ventilation unit "Silent" for TiRAX cabinet system

- This roof ventilation unit "Silent" distinguishes by its low noise level and large airflow.
- Due to these features it may be a good alternative to a climate control unit.
- The low noise level of the roof ventilation unit enables it for office application. The rear of the top cover offers a **break-out possibility for a cable entry** (a).

Material:
sheet metal
Finish:
RAL 7035 light grey
Delivery:
roof including fan and mounting material

A sufficient volume of air inlet, e.g. in the bottom area or via a base with ventilation slots needs to be taken in consideration. A deficiency of the same may reduce efficiency of ventilation.

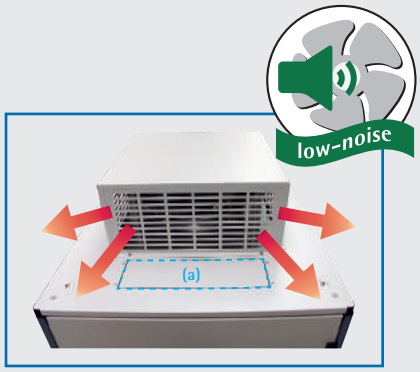



The rear of the top cover offers a **break-out possibility for a cable entry** (a).

Technical information

Airflow (unimpeded)	1545 m^3/h
Noise level	40 dB (A)
Operating voltage/frequency	230 V / 50-60 Hz
Power consumption	68 W / 50 Hz
Size of roof unit (H x W x D)	228 x 551 x 551mm

Order no.

Description	Dimensions W x D x H	Order no.
Roof plate with fan	800 x 800 x 230	318-019-08
Roof plate with fan	800 x 1000 x 230	318-019-10
Roof plate with fan	800 x 1200 x 230	318-019-12
Brush set for cable entry (a)		316-111-10
Power lead (3 m) with thermostat 0-60 °C		230-500-04

Brush set for roof ventilation unit "Silent"

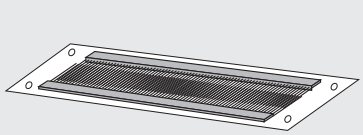

- for use in the perforated breakthrough of the roof ventilator "Silent"
- for use in the openings (a) of the roof
- Dimensions W x D: 365 x 120 mm

Order no.
316-111-10

Power lead 3 m with thermostat 0-60 °C



- for installation of the roof ventilation unit "Silent"

Order no.
230-500-04

12 Cover plates

The cover plates can be mounted directly on the cabinet rack [1] (top or base) according to the layout shown.

	Depth (D) 600 mm	**Depth (D)** 800 mm	**Depth (D)** 1000 mm	**Depth (D)** 1200 mm
(W) 600 mm	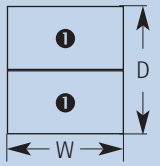	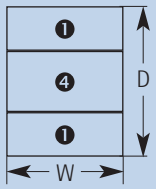	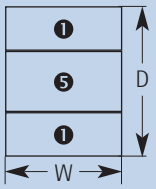	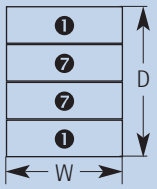
(W) 800 mm	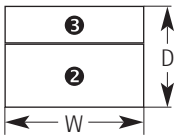	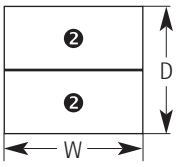	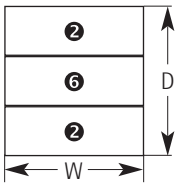	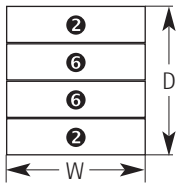

Cover plate, solid

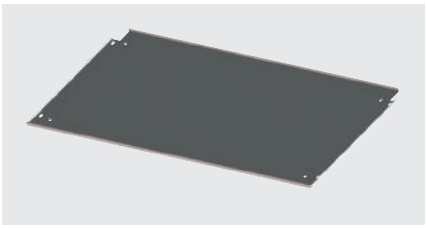

- individual break-throughs on request

Size	Order no.
1	318-111-01
2	318-111-02
3	318-111-03
4	318-111-04
5	318-111-05
6	318-111-06
7	318-111-07

Cover plate perforated

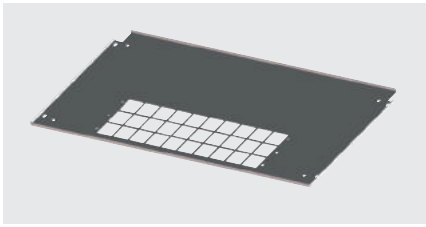

- extendable with filter set 316-100-99

Size	Order no.
1	318-111-23
2	318-111-24

Cover plate for fan base module

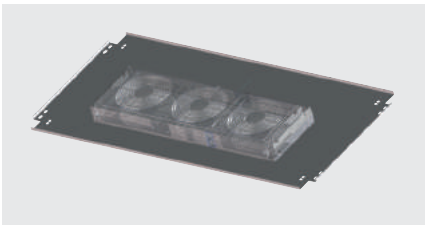

- cover plate for mounting of fan modules [pos. 11]
- also mountable with filter set 316-100-99

Size	Order no.
1	318-111-21
2	318-111-22

Cover plate for cable entry

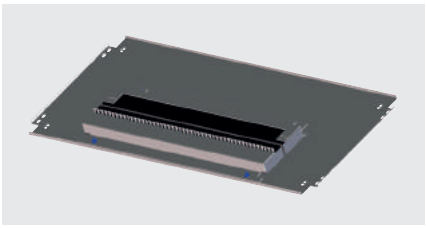

- cover plate for sealed cable entry
- suitable for CEE-plugs

Size	Order no.
1	318-111-25
2	318-111-26
5	318-111-37
6	318-111-38

www.apra.de

13 19" vertical mounting

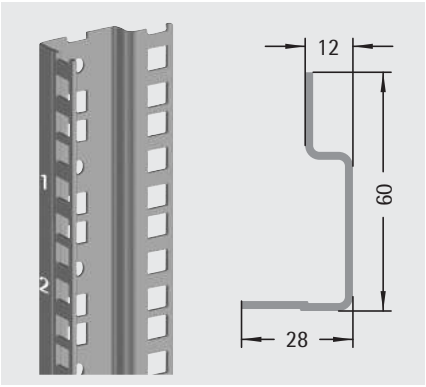

- ASA-perforation (½ 19" perforation)
- with U-labelling

Material:
sheet metal, galvanised

U	Order no.
6	316-120-06
12	316-120-12
15	316-120-15
19	316-120-19
24	316-120-24
33	316-120-33
37	316-120-37
42	316-120-42
46	316-120-46
48	316-120-48

14 Cross bar for 19" integration

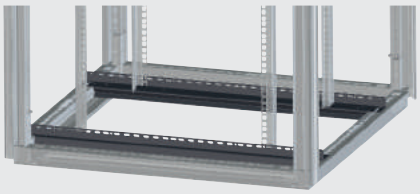
Mounting in width

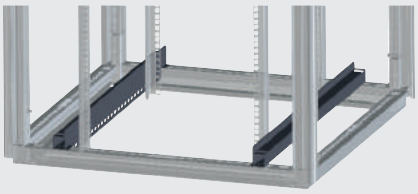
Mounting in depth

- to install the 19" vertical mountings two cross bars per 19" level are required
- steplessly depth adjustable
- at W = 800 mm the 19" level can be moved laterally
- in case of partial mounting, multipurpose crossbars (Pos. 15) are needed

Material:
sheet metal, galvanised

U	W = 600 mm	W = 800 mm	D = 1000 mm	D = 1200 mm
6	318-121-76	318-121-78	318-121-80	318-121-82
12	318-121-76	318-121-78	318-121-80	318-121-82
15	318-121-76	318-121-78	318-121-80	318-121-82
19	318-121-77	318-121-79	318-121-81	318-121-83
24	318-121-76	318-121-78	318-121-80	318-121-82
33	318-121-76	318-121-78	318-121-80	318-121-82
37	318-121-77	318-121-79	318-121-81	318-121-83
42	318-121-76	318-121-78	318-121-80	318-121-82
46	318-121-77	318-121-79	318-121-81	318-121-83
48	-	318-121-70	318-121-72	318-121-74

Mounting plate

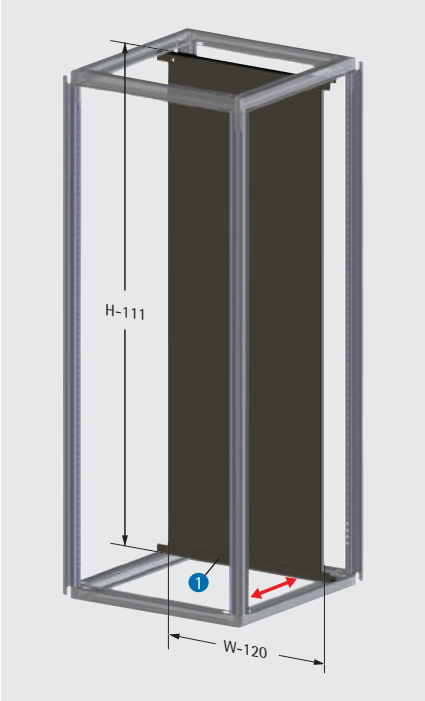

- for mounting heavy components and top hat rails
- is mounted on the cabinet with mounting rails [1] and can be pushed in laterally
- option to adjust the depth in 25mm steps
- multi-purpose crossbars (Pos. 15) are needed for partial mounting

Material:
sheet metal, galvanised

Height (H) mm	Order no. W=600 mm	Order no. W=800 mm
1200	318-130-12	318-130-32
1600	318-130-16	318-130-36
1800	318-130-18	318-130-38
2000	318-130-20	318-130-40
2200	318-130-22	318-130-42

15 Multi-purpose crossbar

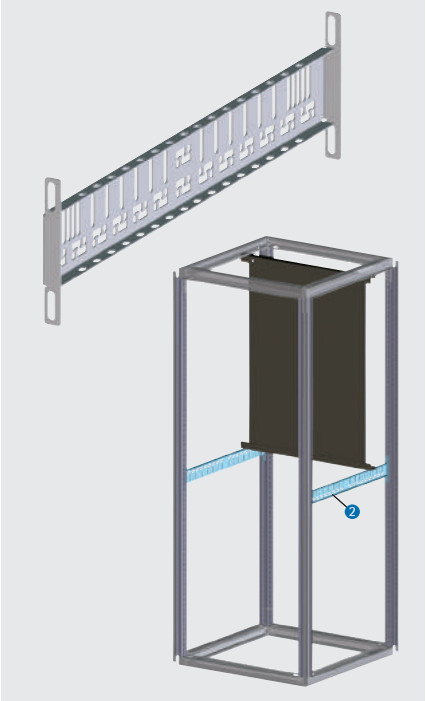

- for 19" partial mounting
- for clean cable entry
- infinitely depth adjustable
- Delivery: 1 piece

Material:
sheet metal, galvanised

Depth (D) / Width (W) mm	Order no.
600	318-120-06
800	318-120-08
1000	318-120-19
1200	318-120-23
500 - 850 (extendable)	318-122-40
700 - 1050 (extendable)	318-122-44

16 Reduction crossbar

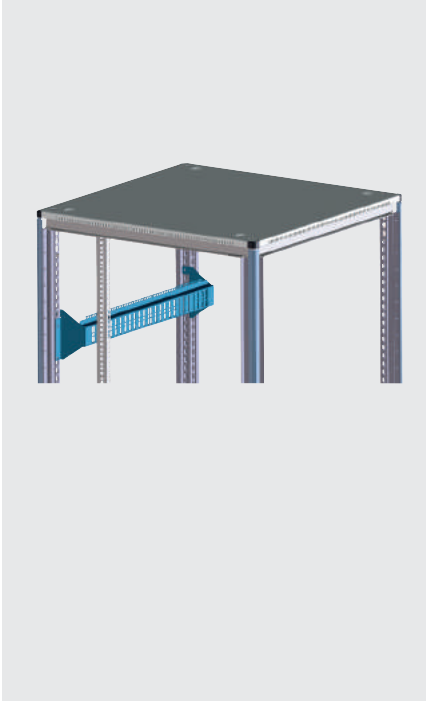

- reduces W = 800 mm to 19"
- with integrated cable management bracket
- can be hung up or screwed on

Material:
sheet metal, galvanised

Depth (D) / Width (W) mm	Order no.
600	318-120-10
800	318-120-12
1000	318-120-14
1200	318-120-21

www.apra.de

180° hinge kit for pivot frame



- to increase the pivot angle of the 19" pivot frame to 180°

Order no.
318-129-20

19" pivot frame



- for cabinet width 800 mm
- pivot angle 95°
- installation centric or asymmetrical

Material:
sheet metal
Finish:
RAL 7035 light grey
Load capacity:
250 kg
Delivery:
incl. crossbars

U	Order no.
21	318-129-24
39	318-129-30

17 Cable guarding rail

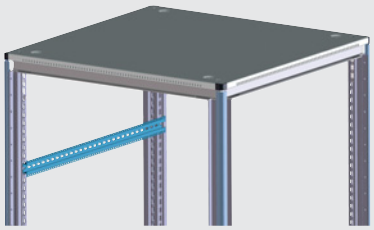

Mounting example

- with integrated cable management bracket
- holds cables in place with cable ties and cable clips

Material:
Aluminium, anodised
Delivery:
mounting material included

Cable clamps can be found on page 167.

Depth (D) / Width (W) mm	Order no.
600 mm	318-121-10
800 mm	318-121-11
Adapter for 1000 mm	316-103-25

Cable clamp, metal (set)

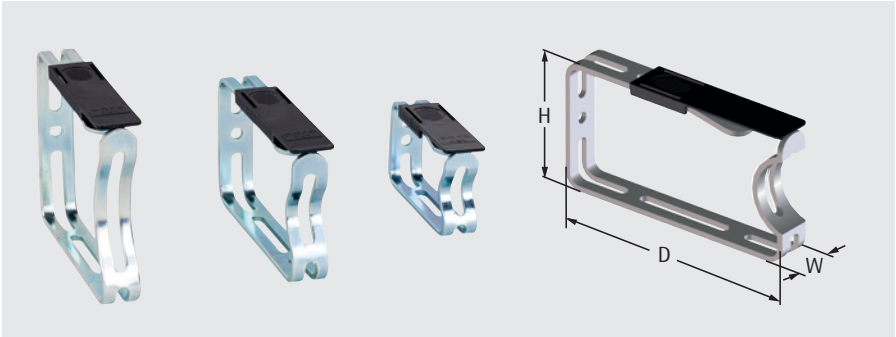

- for securing cables vertically to a 19" frame (for 800 mm wide cabinets)
- set = 10 pieces
- mounting material included

Dimensions (H x W x D) mm	Order no.
44 x 23 x 85	640-036-11
66 x 23 x 125	640-036-12
88 x 23 x 125	640-036-13

18 Viewing door

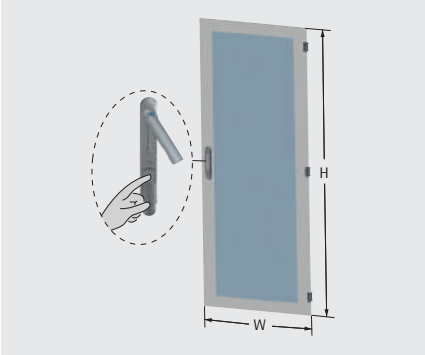

- with turning lever lock for profile half cylinder, L = 40 mm (with push button opening)

Material:
frame: sheet metal,
glass: toughened safety glass 4 mm, grey
Finish:
RAL 7035 light grey

Dimensions (H x W) mm	Order no.
1200 x 600	317-612-01
1200 x 800	317-812-01
2000 x 600	317-620-01
2000 x 800	317-820-01

19 Door, solid

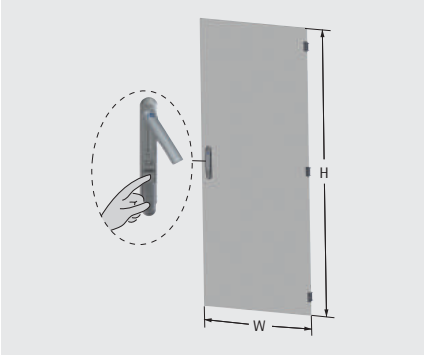

- with turning lever lock for profile half cylinder, L = 40 mm (with push button opening)

Material:
sheet metal
Finish:
RAL 7035 light grey

Dimensions (H x W) mm	Order no.
1200 x 600	317-612-02
1200 x 800	317-812-02
2000 x 600	317-620-02
2000 x 800	317-820-02

20 Door, perforated

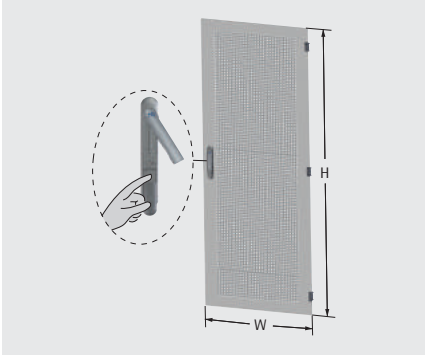

- Perforation 83 %
- with turning lever lock for profile half cylinder, L = 40 mm (with push button opening)

Material:
sheet metal, perforated insert
Finish:
RAL 7035 light grey

Dimensions (H x W) mm	Order no.
1200 x 600	318-612-16
1200 x 800	318-812-16
2000 x 600	318-620-16
2000 x 800	318-820-16

21 Sash door

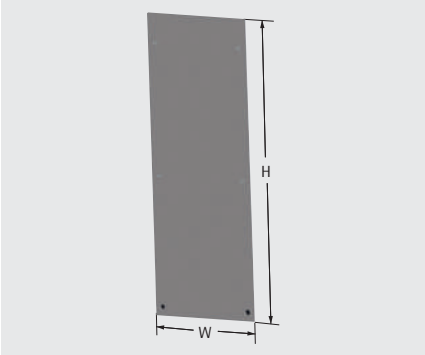

- with 2 or 4 sash fasteners and "double bit key 5 mm" mechanism

Material: sheet metal
Finish: RAL 7035 light grey

Dimensions (H x W) mm	Order no.
1200 x 600	317-612-23
1200 x 800	317-812-23
1200 x 1000	317-012-23
2000 x 600	317-620-23
2000 x 800	317-820-23
2000 x 1000	317-020-23

22 Locking systems for doors

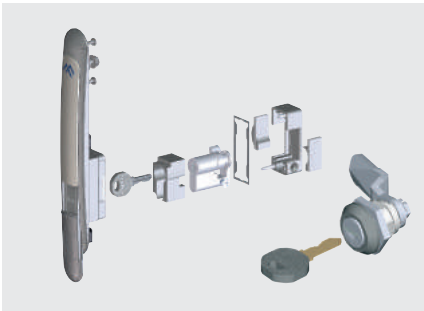

- **profile semi-cylinde**r L = 40 mm with EK 333 closing for turning lever lock of doors (18 to (20)
- **adapter** for installing a profile semi-cylinder with L = 40 mm acc. to DIN 18252
- **sash fastener** with EK 333 closing for locking the sash door (21)

Description	Order no.
profile semi-cylinder	676-316-00
cylinder sash fastener	676-181
Adapter	676-316-10
Sapre key EK 333	676-200

www.apra.de

23 a/b Universal modules

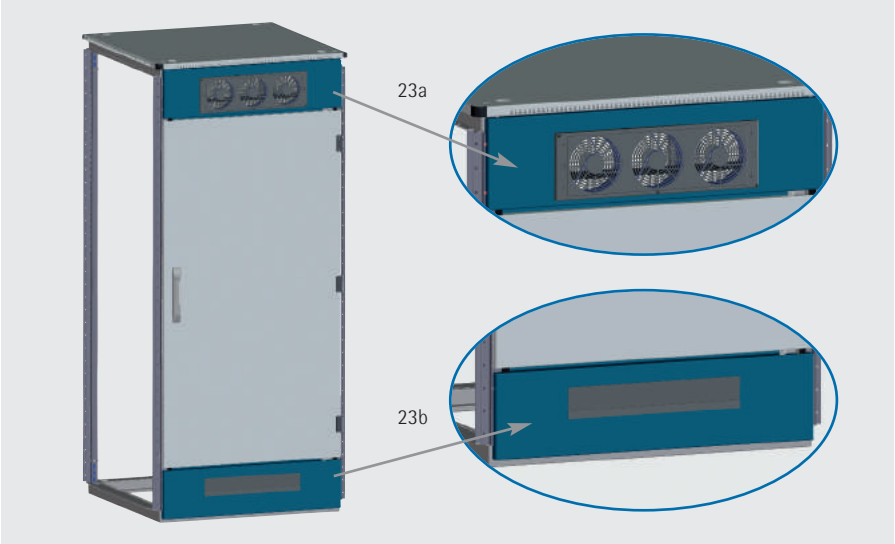

- can be used with shortened doors [18] - [20] or sash doors [21]
- modules can be positioned freely above and/or below the doors shortened by 200 mm
- the fan installation module [23 a] is suitable for use with the basic fan module [11]

Ausführung	Description	W / D mm	Order no.
23a	Fan installation module	600	318-700-00
23a	Fan installation module	800	318-800-10
23b	Cable entry module	600	318-600-02
23b	Cable entry module	800	318-800-02

24 Cabinet connection set IP 20

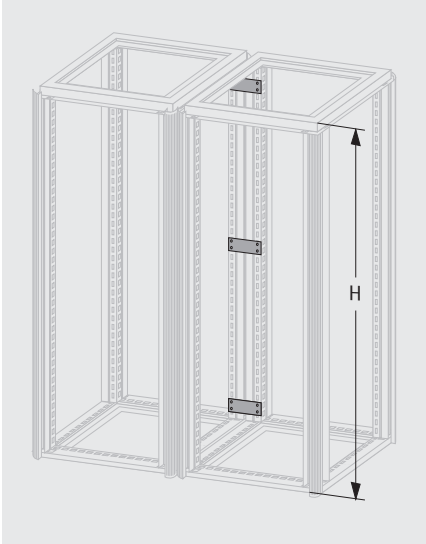

- for connecting as many cabinets as required next to or behind each other
- the design profile of the cabinet remains unchanged

Delivery:
connecting plates, clip-on seals; assembly material included

Order no.
317-105-10

25 Earthing set TiRAX

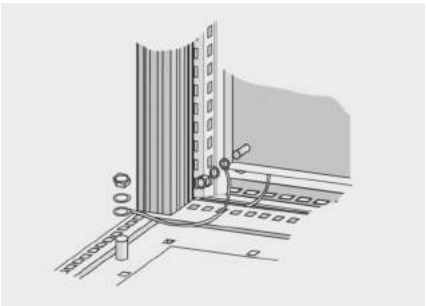

- for earthing according to VDE standards
- for conductive connection of the cabinet's components (cable cross section 2,5 mm²)

Order no.
318-150-00

Door contact switch

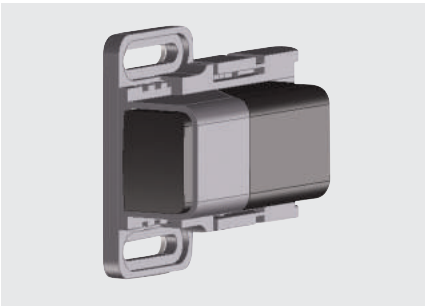

- for switching IEC connector etc. on and off
- mounting material included

Order no.
640-071-00

Terminal box

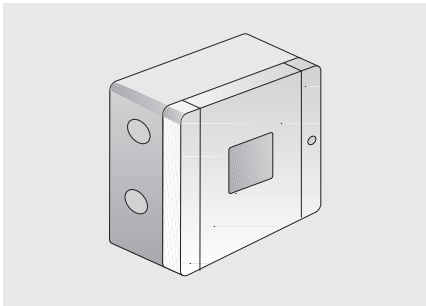

- for use as a cable distribution socket
- simple and quick installation

Order no.
640-059

Screw set M 5 / M 6 / Torx (50×)

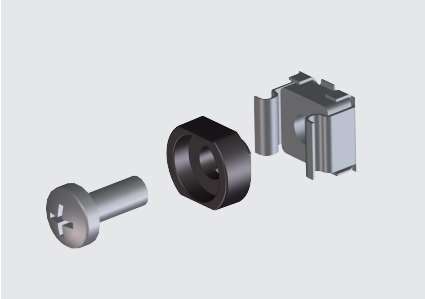

- necessary for mounting of 19" components into racks or enclosures

- **consisting of:**
  - 50 lens head srecws M 5 x 12 / M 6 x 16
  - 50 cage nuts M 5 - 8 / M 6 - 8
  - 50 rosettes for screws M 5 / M 6, with standards flattened

Description	Order no.
M 5	630-991
M 6	630-994
Torx M 6	350-001-20

TiRAX screw set

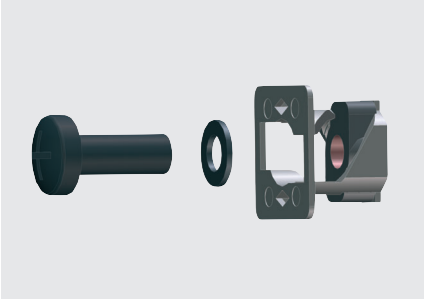

- can be inserted circumferentially in the TiRAX cabinet rack

Delivery:
each with 20× special cage nuts M 6, lens head screw M 6 × 16 and washer

Order no.
630-998

19" plug-in nut M5

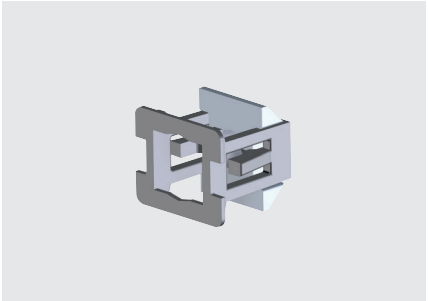

- For mounting in 19" grid rails with a standard breakthrough 9,5 x 9,5 mm (square perforation)

material:
Threaded insert, galvanised steel
Plastic housing:
PA (UL-certificate)

Finish: plastic (black)
thread use: galvanized

Description	Order no.
set 4-fold	631-555-04
set 50-fold	631-555-50

Slide rail, variable depth

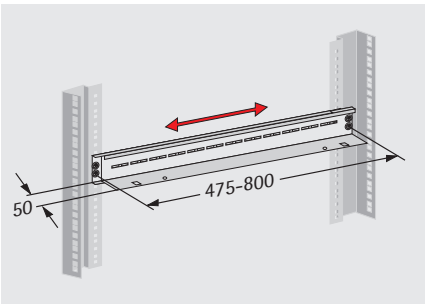

- for 19" plug-in units irrespective of the clearance to the 19" levels
- depth-adjustable
- for use as of a cabinet depth of 800 mm
- Delivery: 1 pair

Material:
sheet metal 1,5 mm, galvanised
Load capacity:
50 kg

Order no.
316-544-20

Slide rail, screwable / hook-in

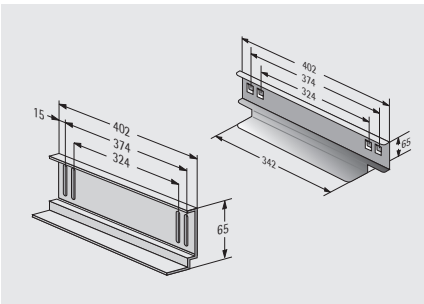

- **screwed/hooked** in onto 19" vertical mountings
- to support heavy 19" plug-in units
- two 19" levels are required for mounting
- Delivery: 1 pair

Material:
sheet metal, galvanised
Load capacity:
50 kg

Description	Order no.
screwable	312-544
hook-in	316-544-00

26 Potential equalisation bar 1 U

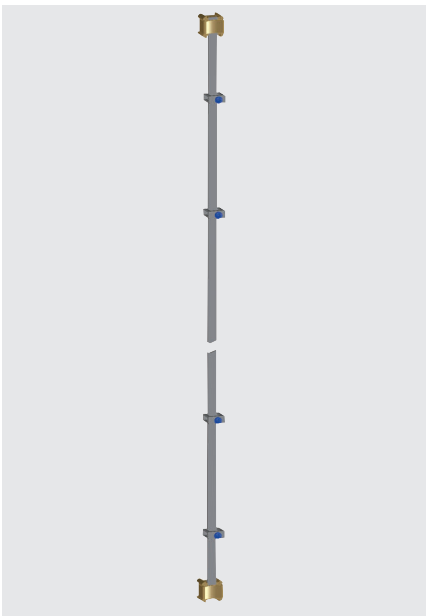

- 30 mm² inkl. 10 pull bows
- mounting material included

L mm	Order no.
2000	640-028-08
1800	640-028-10

www.apra.de

26 19" Potential equalisation bar 1 U

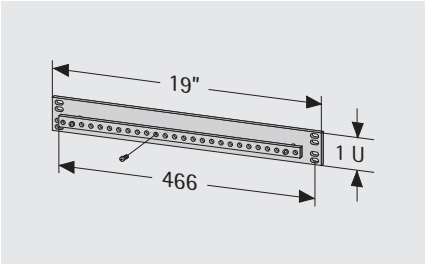

- for 19" or cabinet rack installation
- connection options: 27 × M 5
- rail cross-section: 50 mm²

Material:
sheet metal, copper

Order no.
640-028-00

Noise absorption foam



- absorbs up to 10 dB(A) of sound in enclosures (e.g. fan noise)
- self-adhesive on one side
- thermal conductivity: 0.033 W/mk (acc. to DIN 52612)
- temperature range: –40 °C to +100 °C

Material:
grey PUR ester foam (10 mm), with indentations, partially compressed (air permeable)
Delivery: unmounted
Delivery: 1 m²

If required, we will be happy to affix the noise absorption foam for you before delivering your cabinets or enclosures!

Order no.
671-211

LED cabinet lamp



- cost-optimised LED technology with a power consumption of 5 W (light intensity equivalent to a 75 W light bulb)
- internal power supply unit with wide range voltage 100 - 230 V / AC
- long-life and no maintenance (service life at 20 °C = 60,000 h)
- available with switch or motion detector
- magnetic attachment for individual mounting in the cabinet
- pressure clamp connection

Connection sockets and connections must be ordered separately!

Description	Order no.
LED cabinet light with switch	640-143-05
LED cabinet light with motion detector	640-143-06
Connection with Euro plug, L = 2.5 m	640-143-08

27 Shelf without 19" extension "fixed installation"

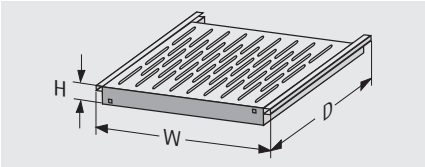

- for mounting into cabinet rack without 19" level
- extraction length: 500 mm
- max. cabinet depth: 800 mm

Material:
sheet metal
Finish:
RAL 7035 light grey
Load capacity:
80 kg (distributed load)
Dimensions (H x W x D):
1,5 U (66,5 mm) x 465 x 410 mm

Cabinet width	Order no.
600 mm	318-141-08
800 mm	318-141-05

27 Shelf without 19" extension "extractable"

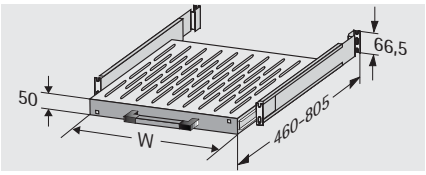

- for mounting into cabinet rack without 19" level
- simple one-person assembly
- extraction length: 500 mm
- max. cabinet depth: 800 mm

Material:
sheet metal
Finish:
RAL 7035 light grey
Load capacity:
60 kg (distributed load)
Dimensions (H x W x D):
1,5 U (66,5 mm) x 465 x 410 mm
1,5 U (66,5 mm) x 665 x 410 mm

Cabinet width	Order no.
600 mm	318-141-04
800 mm	318-141-06

27 19" shelf 2U "fixed"

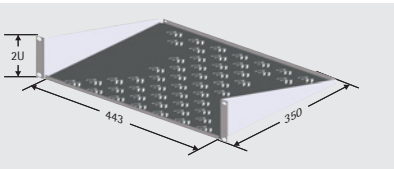

- simple assembly on a 19" grid (only one 19" level required)
- ventilated
- Footprint: 443 x 350 mm

Material:
sheet metal
Finish:
RAL 7035 light grey
Load capacity:
15 kg (distributed load)
Dimensions (H x W x D):
2 U (88 mm) x 19" (482,6 mm) x 350 mm
Floor space (w x d):
443 x 350 mm

Order no.
315-810-20

27 19" shelf 1 U "VARiplain" fixed installation with 19" grid

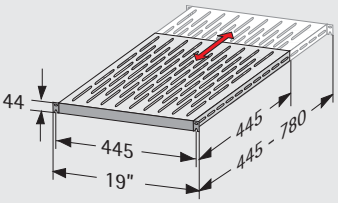

- depth variable due to VARiplain technology
- telescopic: 445 - 780 mm (see fig.)
- simple one-person assembly through open long hole in the 19" front (hook-in)
- mounting material included

Material:
sheet metal 2 mm
Finish:
RAL 7035 light grey
Load capacity:
150 kg (distributed load)

Dimensions (H x W x D):
1 U (44 mm) x 19" (482,6 mm) x 445 - 780 mm
Floor space (w x d):
445 x (445 - 780) mm
Delivery:
mounting material included

Order no.
316-036-99

27 19"-shelf 1,5 U "extractable"

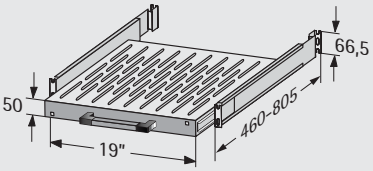

- variable-depth installation
- extraction 500 mm
- simple one-person assembly

Material:
sheet metal
Finish:
RAL 7035 light grey
Load capacity:
60 kg (distributed load)
Dimensions (H x W x D):
1,5 U (66,5 mm) x 19" (482,6 mm) x 465 - 665 mm
Floor space (w x d):
410 x (465 - 665) mm

D mm	Order no.
465	318-141-00
665	318-141-01

www.apra.de

TiRAX "plug & play"

- dismountable steel profile cabinet rack
- two lateral sash doors with quick lock mechanism
- front viewing door with three-point locking and tinted toughened safety glass
- rear sheet metal door with three-point locking, installation as side door possible
- both doors can accommodate a profile half cylinder, L = 40 mm
- 19" level 42 U / 24 U, front and rear
- 10 metal cable clamps at the front 19" mount (6 clamps at H = 1200 mm)
- two cable guard rails with integrated cable management bracket
- top plate 2-part, with triple fan module
- 19" power strip 1 U (9-way)
- multi-part bottom plate with rubber foam cable entry
- cabinet lamp with power outlet and magnetic holder
- equipotential bonding set (installed)
- cable entry base H = 100 mm
- screw set M 5 (50×)

Finish:
Trim parts, base
RAL 7035 light grey
Design profiles:
RAL 5014 pigeon blue
Delivery:
fully assembled, prewired on central socket and tested / base provided

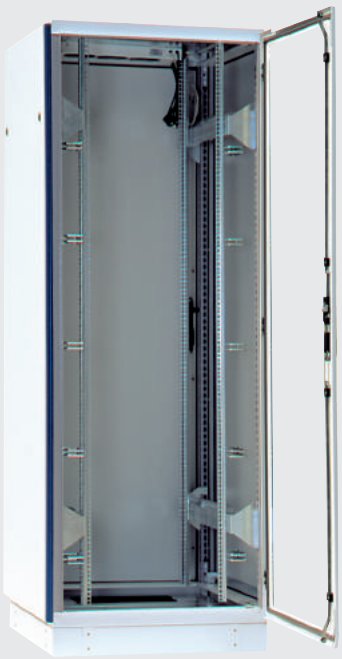

Dimensions (H x W x D) mm	**Order no.**
(2000 + 100) x 800 x 800	318-200-01
(1200 + 100) x 800 x 800	318-200-29

TiRAX "active"

- dismountable steel profile cabinet rack
- two lateral sash doors with quick lock mechanism
- front viewing door with three-point locking and tinted toughened safety glass
- rear sheet metal door with three-point locking, installation as side door possible
- both doors can accommodate a profile half cylinder, L = 40 mm
- 19" level 42 U / 24 U, front and rear
- 10 metal cable clamps (6 clamps at H = 1200 mm) at the front 19" level
- 2-part cover plates in top sheet, with 3-way fan module
- 19" power strip 1 U (9-way)
- multi-part bottom plate with rubber foam cable entry
- equipotential bonding set (installed)
- cable entry base H = 100 mm
- screw set M 5 (50×)

Finish:
Trim parts, base
RAL 7035 light grey
Design profiles:
RAL 5014 pigeon blue
Delivery:
fully assembled, base provided



Dimensions (H x W x D) mm	**Order no.**
(2000 + 100) x 800 x 800	318-200-02
(1200 + 100) x 800 x 800	318-200-09

TiRAX "passive", IP 54

- dismountable steel profile cabinet rack
- two lateral sash doors with quick lock mechanism
- front viewing door with three-point locking and tinted toughened safety glass
- rear sheet metal door with three-point locking, installation as side door possible
- both doors can accommodate a profile half cylinder, L = 40 mm
- 19" level 42 U / 24 U, front and rear
- 10 metal cable clamps (6 clamps at H = 1200 mm) at the front 19" level
- top panel, single-piece, liftable if necessary
- multi-part bottom plate with rubber foam cable entry
- equipotential bonding set (installed)
- cable entry base H = 100 mm
- screw set M 5 (50×)

Finish:
Trim parts, base
RAL 7035 light grey
Design profiles:
RAL 5014 pigeon blue
Delivery:
fully assembled, base provided



Dimensions (H x W x D) mm	Order no.
(2000 + 100) x 800 x 800	318-200-03
(1200 + 100) x 800 x 800	318-200-08

www.apra.de

TiRAX "cool-box", IP 54
TiRAX "cool-roof", IP 54

- dismountable steel profile cabinet rack
- two lateral sash doors with quick lock mechanism
- front viewing door with three-point locking and tinted toughened safety glass
- rear sheet metal door with three-point locking
- both doors can accommodate a profile half cylinder, L = 40 mm
- 19" level 42 U, front and back
- 10 metal cable clamps at the front 19" level
- top panel, single-piece
- 19" power strip 1 U (9-way)
- equipotential bonding set (installed)
- door contact switch for shutdown of air conditioning if front door is opened
- cable entry base H = 100 mm
- screw set M 5 (50×)
- multi-part bottom plate with rubber foam cable entry

TiRAX "cool-box":

- air conditioning 1050 W (Ta35 / Ti35) installed on lateral hinged door (mounted alternatively right or left)

TiRAX "cool-roof":

- air conditioning 1050 W (Ta35 / Ti35), installed on the top



"cool-box" "cool-roof"

Finish:
Trim part, base:
RAL 7035 light grey
Design profiles:
RAL 5014 pigeon blue

Delivery:
partially assembled (air conditioning mountable with 6 screws on lateral hinged door or on top panel), base provided

Air conditioning: cooling capacities of up to 6 KW possible on request. Contact us to find more!

Dimensions (H x W x D) mm	Description	Order no.
(1200 + 100) x (800 + 140) x 800	TiRAX "cool-box" 24 U	318-200-55
(2000 + 100) x (800 + 140) x 800	TiRAX "cool-box" 42 U	318-200-04
(1200 + 100) x (800 + 140) x 1000	TiRAX "cool-box" server cabinet 24 U	318-200-54
(2000 + 100) x (800 + 140) x 1000	TiRAX "cool-box" server cabinet 42 U	318-200-11
(2000 + 500) x 800 x 800	TiRAX "cool-roof" 42 U	318-200-05
(2000 + 500) x 800 x 1000	TiRAX "cool-roof" server cabinet 42 U	318-200-28

19" TiRAX "heavy-weight" pivot frame cabinet

The "heavy-weight" pivot frame cabinet is based on the TiRAX cabinet series and enables a pivot integration of 19" plug-in units with **high loads of up to 250 kg** (e.g. power amplifiers).

- visually stylish cabinet system
- protection class IP 54
- consists of stable cabinet rack and easily detachable trim parts
- good accessibility for plant engineering and on-site installation
- cable entry possible as standard from below, above or from the sides
- optional mounting plate in the rear area enables the installation of connection splitters, cable ducts, c-profiles or top hat rails
- lateral offset mounting possible
- maximum mounting depth: 440 mm
- pivot frame can be hinged on the left as well as on the right side and is equipped with a double-bit key lock
- frame can be pivoted up to 95°

Finish:
Trim parts, base
RAL 7035 light grey
Design profiles:
RAL 5014 pigeon blue
Dimensions (H x W x D):
(2000 + 100) x 800 x 800 mm
Delivery:
fully assembled, base provided

Further sizes on request!

Order no.
318-200-40



(Fig. does not correspond to standard delivery)



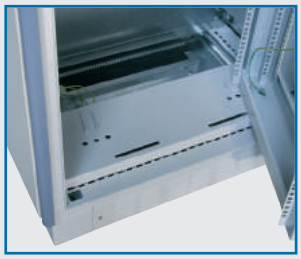

Cabinet bottom with pivot frame crossbar and flexible cable entry via foam rubber



Delivery

Pos.	pc.	Description
1	1	Cabinet rack
2	1	Heavy load pivot frame with 19" level 39 U
3	1	Viewing door with turning lever lock
4	1	Rear door with turning lever lock
5	2	Lateral sash doors with quick lock mechanisms
6	1	Two piece bottom panel with cable entry
7	1	Top, height-adjustable (for passive vantilation)
8	1	equipotential bonding set, installed
9	1	Base H = 100 mm, front side with ventilated cover panel
10	1	Screw set M 5 (50x)

Slide rails



- to support heavy and / or deep plug-in units
- Delivery: 1 Paar

Load capacity: 50 kg

Order no.
318-129

3-way fan module

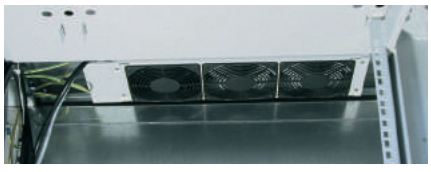

- unimpeded air flow: 345 m^3/h
- complete with connecting cable, temperature regulation and adapter for cabinet mounting

Order no.
318-100-55

Pivot frame panel



- to cover the lateral area in case of offset installation

Finish: RAL 7035 light grey

Order no.
318-129-22

www.apra.de

19" EMC cabinet TiRAX "60 dB"

Based on the TiRAX cabinet series, the EMC cabinet "60 dB" offers a reliable EMC and IP protection even in rough industrial environment conditions.

- fully symmetrical cabinet construction: all doors and lateral sash doors are universally mountable
- protection class IP 54
- stylish design: two-tone look with coloured design profiles
- modular interior construction: symmetrical design of cabinet rack enables cable ducts, multi-purpose struts etc. to be universally mountable
- all enclosure parts are connected to each other conductively via EMC sealings
- double-walled trim parts
- the milled and laser welded profile of the cabinet's galvanised sheet metal side rail ensures high rigidity and permanent electrical conductivity

Finish:
Trim parts, base
RAL 7035 light grey
Design profiles:
RAL 5014 pigeon blue
Dimensions (H x W x D):
(2000 + 100) × 600 × 800 mm
Delivery:
fully assembled



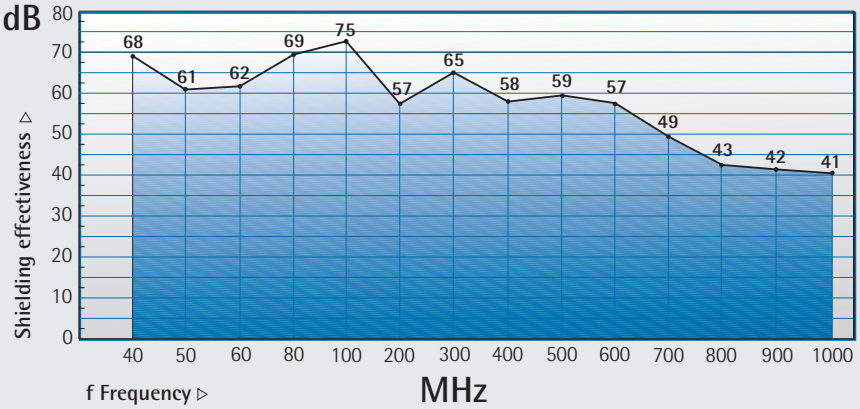

Further sizes on request!

Order no.
318-210-10

Delivery

Pos.	pc.	Description
1	1	Cabinet rack
2	2	19" level 42 U
3	2	Front and rear door, solid, with turning lever lock
4	2	Sash doors, lateral
5	1	Bottom panel, solid
6	1	Top panel, solid
7	1	equipotential bonding set, installed
8	1	Base H = 100 mm

TiRAX "cool & safe", IP 54

- dismountable steel profile cabinet frame
- two lateral sash doors with quick release
- front door with three-point locking and tinted tempered safety glass
- rear sheet metal door with three-point locking (installation also possible as side door)
- both doors suitable for receiving a profile half-cylinder
- 19 "level front and rear
- roof, one-piece
- floor panel multi-part, with foam cable entry
- earthing set, mounted
- base H = 100 mm
- screw set M 5 (50-fold)
- **19 " Fire extinguishing system:**
  - master module 2 HE
  - door contact switch for suppressing the deletion when opening the doors
  - slide rail set, depth-variable
  - two multifunction crossbeams
- **Air conditioning:**
  Air conditioner 1050 W (Ta35 / Ti35) mounted on lateral sash door (door can be mounted on the right or left)

Finish:
Trim parts, base
RAL 7035 light grey
Design profiles:
RAL 5014 pigeon blue
Dimensions (H x W x D):
(2000 + 100) x (800 + 138) x 1000 mm
Delivery:
fully assembled, base provided

Order no.
318-202-76







Detail: 19" fire extinguishing system installed in the TiRAX "cool & safe" cabinet

www.apra.de

19" TiRAX Colocation cabinet

The colocation cabinets are based on the TiRAX cabinet system and were especially designed for IT facilities and data centres.

- all compartments are separated holohedral by shelves
- cable inlet to each compartment by a separate cable duct
- 19" levels are individually adjustable in depth at each compartment
- with perforated front and rear doors that can be locked separately
- electronic locking systems available on request
- closed bottom plate
- mounted equipotential bonding set
- set of cable clamps (10 fold)
- 19" screw set M 5 (50-fold)

Finish:
Rack, cover panels:
RAL 9005 jet black
Design profiles:
RAL 7037 dusty grey
Dimensions (H x W x D):
2000 x 800 x 1000 mm
Protection system:
IP 20
Delivery:
fully assembled, base provided



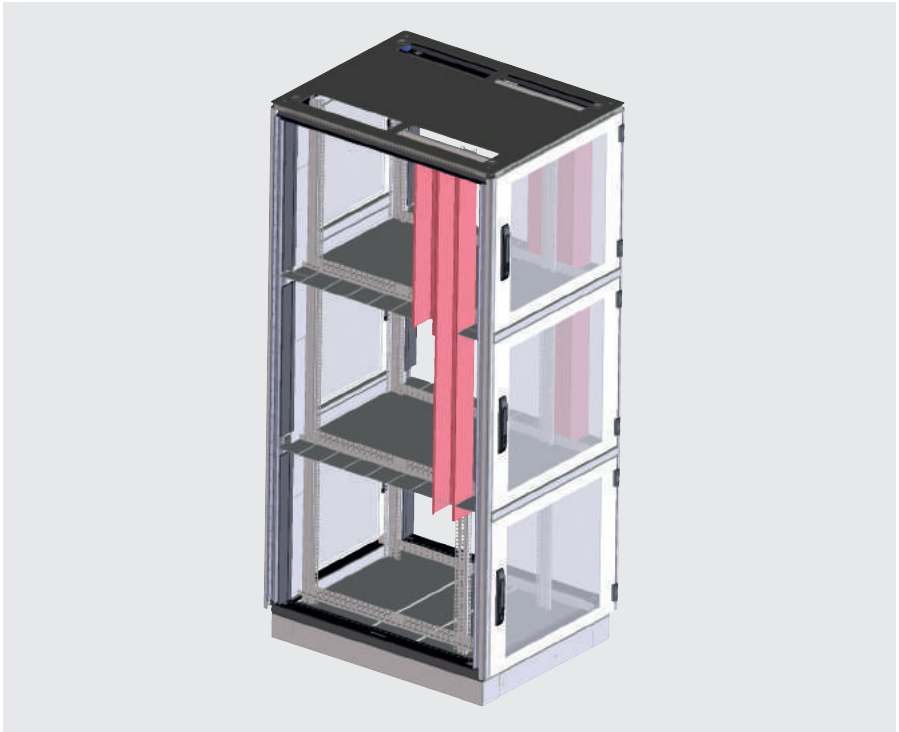

Further accessories like locking systems, etc. can be found at www.apra.de!

Delivery

Item	pc.	Description
1	1	Rack
2	2	19" extension set (2 levels per compartment)
3	4/6	Perforated doors
4	1/2	Separating shelves
5	1	Cable duct per compartment
6	1	Top cover with cable entry (cutout covered with brush)
7	2	Side panels

Description	Order no.
double: 2 x 19 U	318-911-40
triple: 3 x 12 U	318-908-60

19" TiRAX Computer Cabinet

- enables the installation of a reliable, user-friendly and also visually stylish computer workstation in adverse environmental conditions in industrial fields
- protection class IP 54
- cooling system can be integrated
- can be fitted with 19" components or be built as complete tower solution
- cables entry from underneath as standard, but top or lateral cable entry also possible
- three-part bottom panel with cable entry through foam rubber pad
- a profile half cylinder locks the keyboard cover
- doors with turning lever lock (concealed) for profile half cylinder

Material:
sheet metal, galvanised
Finish:
Trim parts, base
RAL 7035 light grey
Design profiles:
RAL 5014 pigeon blue
Protection system:
IP 54
Delivery:
fully assembled

A wide range of ventilation and air conditioning components can be found in the section "Air conditioning technology" from page 129. We will be pleased to put your system together!

Dimensions (H x W x D) mm	Order no.
(1800 + 100) x 600 x 600	318-202-65
(1800 + 100) x 600 x 800	318-202-85



Delivery

Pos.	pc.	Description
1	1	Cabinet rack
2	1	Two part front, consisting of viewing door, including operating unit, solid door
3	1	Rear door with turning lever lock
4	2	Side panels
5	(1) (1)	Two part bottom panel with cable entry (with D = 600 mm) Three part bottom panel with cable entry (with D = 800 mm)
6	1	Top panel, detachable
7	1	equipotential bonding set, installed
8	1	Base, H = 100 mm

19" extension set

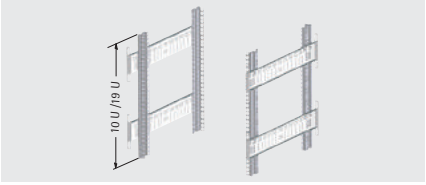

- 19" vertical mountings with crossbars for individual installation (each 4 pieces)
- Extension kit 10 U: installation behind the upper glazed door
- Extension kit 19 U: installation behind the lower closed door

Extension set 10 U

Cabinet depth (D)	Order no.
600 mm	318-201-81
800 mm	318-201-82

Extension set 19 U

Cabinet depth (D)	Order no.
600 mm	318-201-83
800 mm	318-201-84

www.apra.de

19" standing workstation / 19" stand-alone distribution system

[A] 19" standing workstation with wooden desktop (without figure)

- work surface of the desktop (W × D = 712 × 800 mm)

[B] 19" stand-alone distribution system with a single-piece top panel of sheet metal

- dismountable cabinet rack
- front-side tinted viewing door with turning lever lock (profile half cylinder accommodation possible)
- 19" level 19 U, front and back
- 4 crossbars for depth adjustment of 19" levels
- rear cable entry point with brush, top-mounted for feeding through screen and keyboard cables (see fig. 2), for the 19" stand-alone distribution system bottom-mounted for cable entry
- levelling feet to align the workstation

Finish:
Trim parts, desktop:
RAL 7035 light grey
Design profile:
RAL 5014 pigeon blue
Delivery:
fully assembled



Delivery

Pos.	pc.	Description
1	1	Cabinet rack, dismountable
2	1	Tinted viewing door with turning lever lock
3	3	Sash doors (rear/side)
4	4	Vertical mountings 19 U
5	4	Depth crossbars
6	1	Two piece bottom panel
7	1	Desktop (only for 19" standing workstation) Top panel (only for 19" stand-alone distribution system)
8	1	Rear cable entry point with brush seal **top-mounted** (for 19" standing workstation) **bottom-mounted** (for 19" stand-alone distribution system)
9	4	Levelling feet
10	1	equipotential bonding set (only for 19" stand-alone distribution system)
11	1	19" screw set M 5 (50 ×)

Description	Dimensions (H x W x D) mm	Order no.
19" standing workstation	1100 x 712 x 800	318-202-75
19" distribution system	1100 x 600 x 800	318-202-30

Other preferred colours

- RAL 1032 (broom yellow)
- RAL 5010 (gentian blue)
- RAL 3002 (carmine red)
- RAL 6029 (mint green)
- RAL 7037 (dusty grey)

Colour display similar!

Configure your own individually designed cabinet.

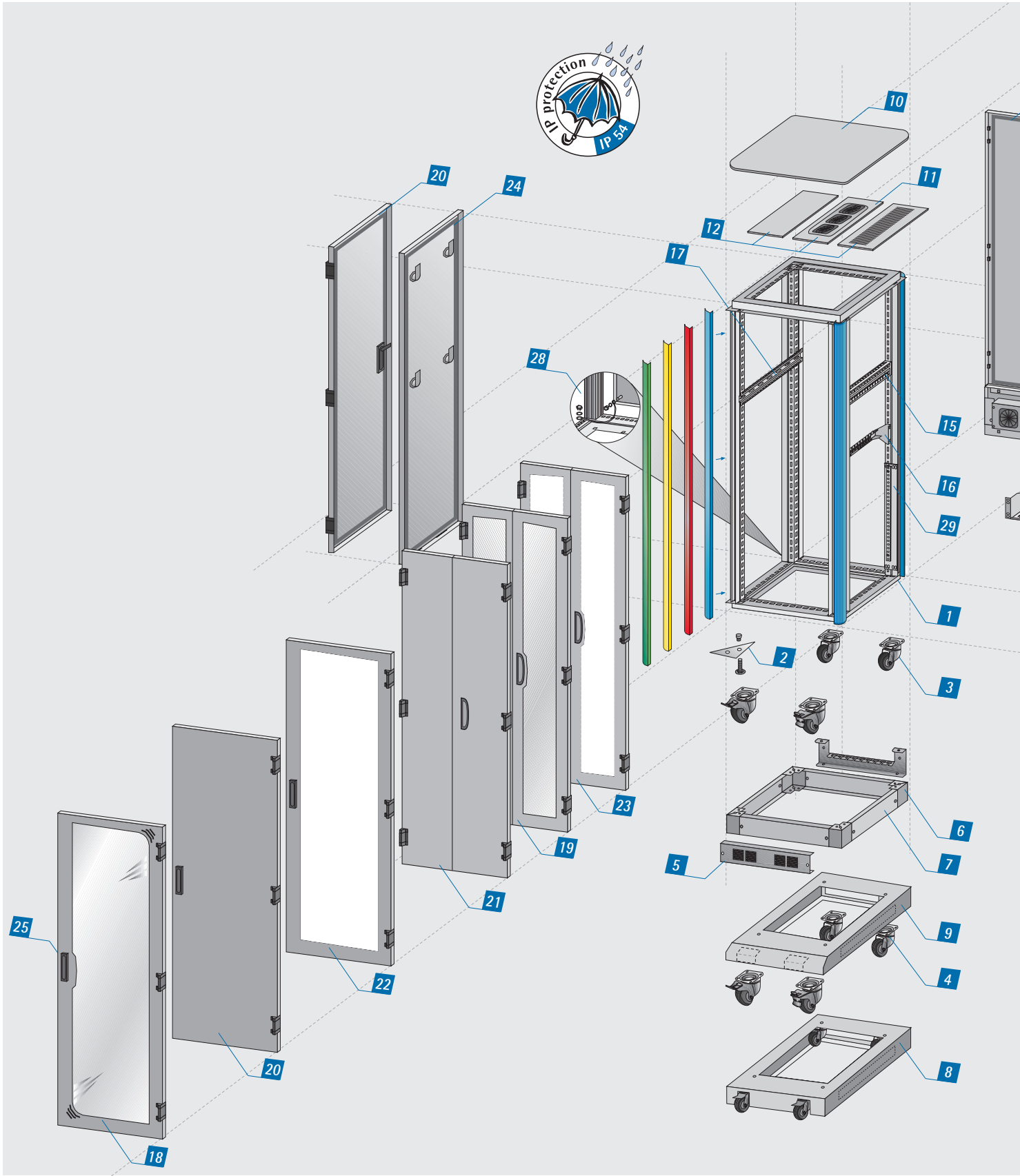

www.apra.de

Select the required cabinet components step by step:

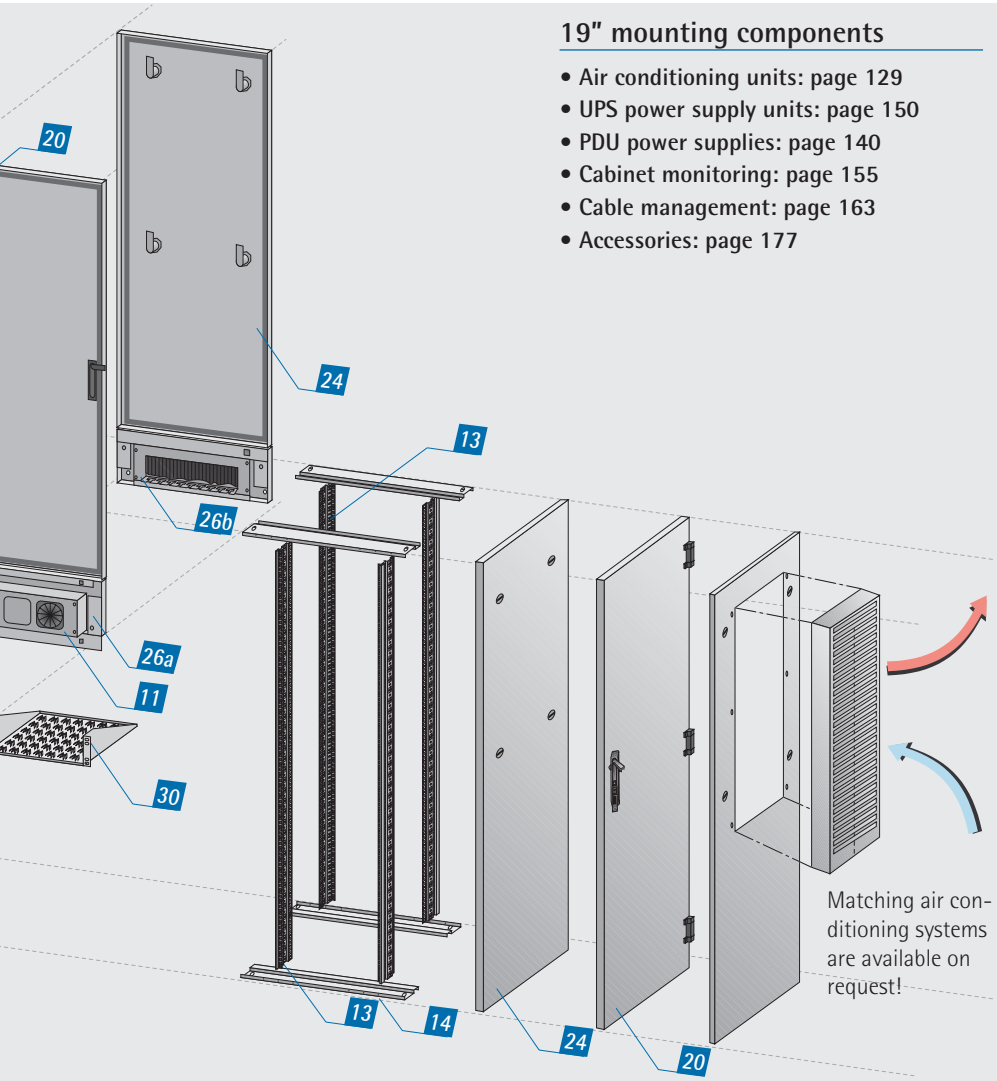

19" mounting components

- Air conditioning units: page 129
- UPS power supply units: page 150
- PDU power supplies: page 140
- Cabinet monitoring: page 155
- Cable management: page 163
- Accessories: page 177

Matching air conditioning systems are available on request!

Item	Description	Page
1	Cabinet rack	42
2	Adjusting feet	43
3	Castor set	43
4	Castor set, tilt-prevention	43
5	Castor base	43
6	Tilt prevention base	43
7	Base covers	43
8	Filter set	44
9	Base corner set	44
10	Top	44
11	Fan module	45
12	Cover plates	47
13	19" vertical mounting	48
14	Cross bar for 19" integration	48
15	Multi-purpose crossbar	49
16	Reduction crossbar	49
17	Cable guarding rail	50
18	Viewing door	51
19	Viewing door, split	51
20	Solid door	51
21	Solid door, split	52
22	Perforated door	52
23	Perforated door, split	52
24	Sash door	53
25	Locking system for doors	53
26a	Fan installation module	54
26b	Cable entry module	54
27	Cabinet connection set	54
28	Earhting set	54
29	Potential equalisation rail	56
30	Shelves	57

Technical information: max. 19" installation dimensions

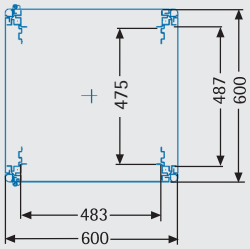

Top view cabinet rack
W x D = 600 x 600 mm

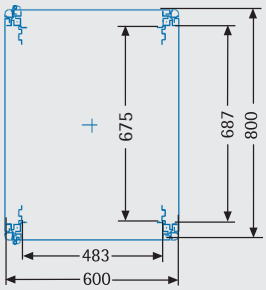

Top view cabinet rack
W x D = 600 x 800 mm

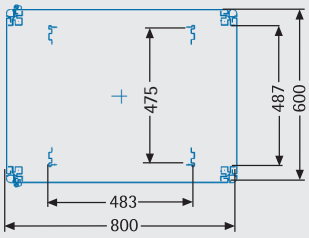

Top view cabinet rack
W x D = 800 x 600 mm

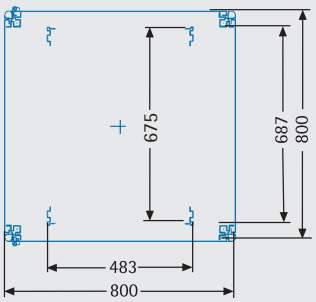

Top view cabinet rack
W x D = 800 x 800 mm

1 Cabinet rack, dismountable

The cabinet rack consists of two identical sheet metal frames **(1)**, four sheet metal functional profiles **(2)** and four painted sheet metal design profiles **(3)** clipped onto the functional profiles.

Dimensions:
W: Cabinet width
w: clear opening width
w = W - 146 mm
D: Cabinet depth
d: clear opening depth
d = D - 146 mm
H: Cabinet height
h: clear opening height
h = H - 100 mm

Finish:
(1) Top / bottom frame:
RAL 7035 light grey
(2) Functional profile: galvanised
(3) Design profile: RAL 5014 pigeon blue
Delivery:
fully assembled

The design profile **(3)** can be matched to your company colour if desired.

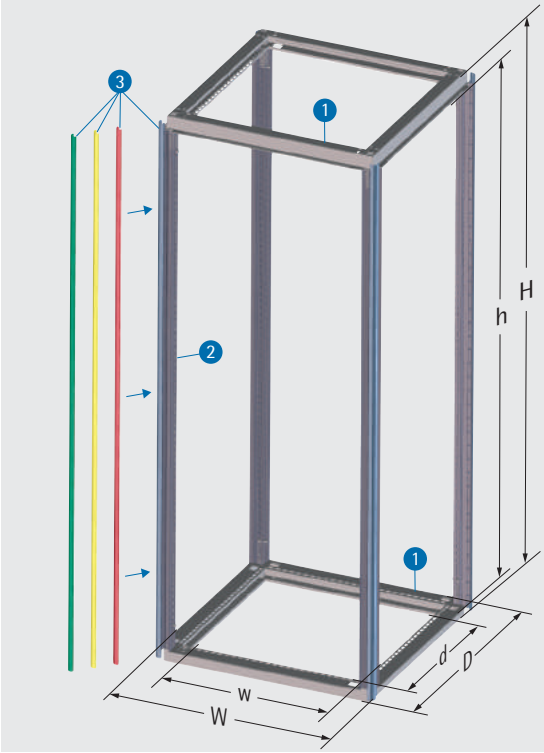

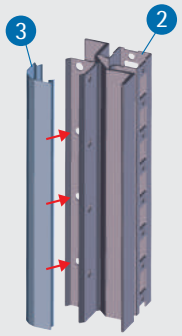

Clip-in design profiles for individual colouring

Other preferred colours

- RAL 1032 (broom yellow)
- RAL 5010 (gentian blue)
- RAL 3002 (carmine red)
- RAL 6029 (mint green)
- RAL 7037 (dusty grey)

Colour display similar!

Dimensions (W x D) mm	U	H mm	Order no.
600 x 600	24	1200	318-660-02
800 x 600			318-860-02
800 x 800			318-880-02
600 x 1000			318-601-02
800 x 1000			318-810-02
600 x 600	33	1600	318-660-06
800 x 600			318-860-06
800 x 800			318-880-06
600 x 600	37	1800	318-660-08
800 x 600			318-860-08
800 x 800			318-880-08
600 x 600	42	2000	318-660-10
800 x 600			318-860-10
800 x 800			318-880-10
600 x 1000			318-610-10
800 x 1000			318-810-10
600 x 1200			318-612-10
800 x 1200			318-812-10
600 x 600	46	2200	318-660-12
800 x 600			318-860-12
800 x 800			318-880-12
600 x 1000			318-610-12
800 x 1000			318-810-12
600 x 1200			318-612-12
800 x 1200			318-812-12

www.apra.de

2 Adjusting feet

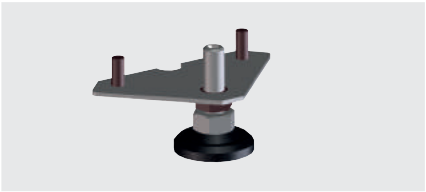

- to be screwed onto the rack (1) or to the corners of the base
- Height min. = 25 mm
- set = 4 pieces

Description	Order no.
Mounting on rack	318-026-00
Mounting on base	318-026-02

3 Castor set

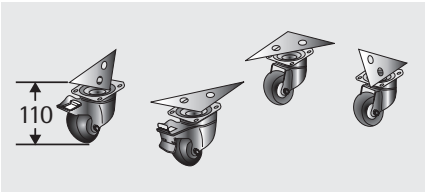

- to be screwed directly onto the cabinet rack (1)
- 4 swivel castors (2 with parking brake)

Load capacity:
450 kg

Order no.
318-026-10

4 Castor set, tilt prevention base

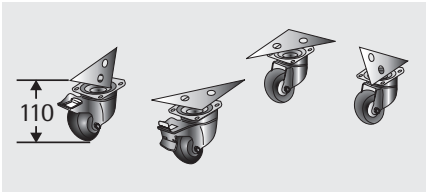

- to to be screwed directly onto the cabinet rack (1)
- 4 swivel castors (2 with parking brake)

Load capacity:
450 kg

Order no.
316-026-50

5 Castor base

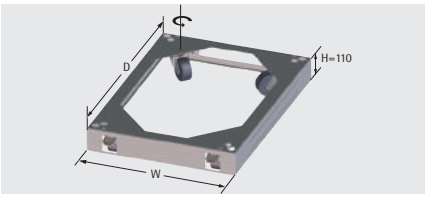

- 4 swivel castors (2 with parking brake)
- cable entry from rear (opening with brush) and side

Finish:
RAL 7035 light grey
Load capacity:
450 kg

W mm	D mm	Order no.
600	600	318-126-60
600	800	318-126-80
800	600	318-128-60
800	800	318-128-80

6 Tilt prevention base

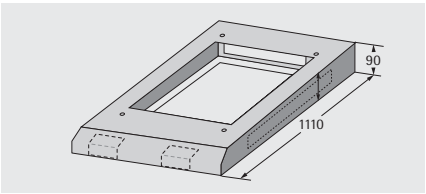

- static base with integrated tilt prevention
- offers secure standing when drawers with heavy equipment are extracted
- rear or lateral cable entry

Material:
sheet metal
Finish:
RAL 7035 light grey

W mm	D mm	Order no.
600	1000	318-026-11
800	1000	318-028-11

7 Base covers

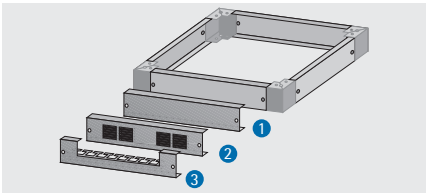

- for invidual base construction combined with our base corner set
- 4 covers complete one base

Type 1: solid
Type 2: ventilated
Type 3: with cable entry

Material:
sheet metal
Finish:
RAL 7035 light grey

W / D mm	Type	Order no.
600	1	318-100-10
800		318-100-20
1000		318-100-30
1200		318-100-50
600	2	318-100-12
800		318-100-22
600	3	318-100-14
800		318-100-24

8 Filter set for base covers

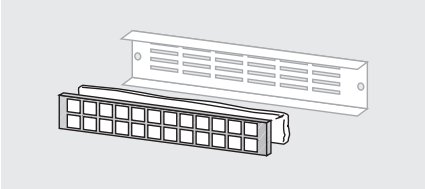

- matches base covers "Type 2 ventilated" (see pos. 7)

Material:
sheet metal galvanised, filter fleece

W / D mm	Order no.
600	318-100-16
800	316-101-99

9 Base corner set

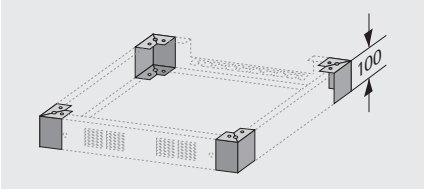

- set = 4 pieces
- includes mounting materials
- extendable
- Height: 100 mm

Material:
sheet metal
Finish:
RAL 7035 light grey

Order no.
318-100-00

10 Top, solid

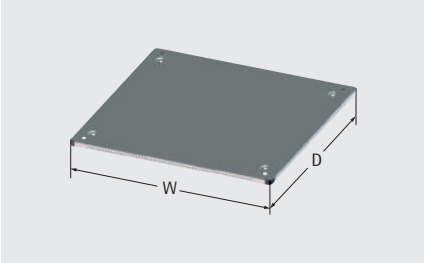

- can be raised up to 15 mm for ventilation (using lifting eye bolts, see below)
- suitable for IP 54

Finish:
RAL 7035 light grey

Dimensions mm	Order no.
600 x 600	318-016-60
600 x 800	318-016-80
600 x 1000	318-020-60
600 x 1200	318-022-60
800 x 600	318-018-60
800 x 800	318-018-80
800 x 1000	318-020-80
800 x 1200	318-022-80

Spacer bolts for top plates

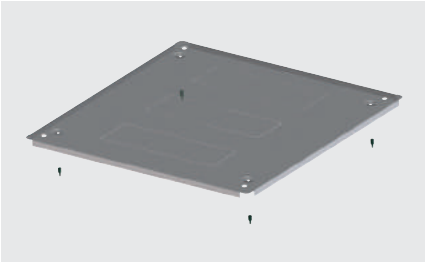

- The further lifting (H = 15 mm) of top panel is possible with additional spacer bolts.
- set = 4 pieces

Material:
steel

Order no.
316-016-65

Eye bolt kit

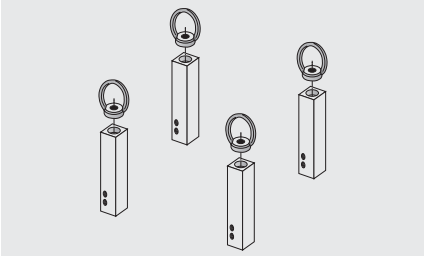

- lifting eye bolts for cabinet relocation
- set = 4 pieces

Load capacity:
500 kg

Order no.
318-026-20

www.apra.de

11 Basic fan module



- fan module, fully pre-wired
- ventilation or extraction, depending on assembly position
- for installation in the top/bottom area of the cabinet
- different power cords available (see right side)

Material:
polycarbonate UL94 V-0
Finish:
similar to RAL 9005 jet black
Dimensions (H x W x D):
44 x 450 x 140 mm

The fan characteristics and noise levels can be found in the diagrams on page 133.

The fan module „silent" cannot be combined with an extension module!

Description	Unimpeded air flow	Basic module	Extension module
fan module 1-way	115 m³/h	230-500-01	230-500-11
fan module 2-way	120 m³/h	230-500-02	230-500-12
fan module 3-way	345 m³/h	230-500-03	230-500-13
fan module "silent"	240 m³/h	230-500-43	-

Filter set for fan module

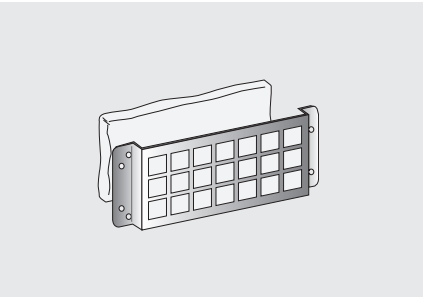

Material:
Aluminium, filter fleece

Description	Order no.
Filter set	316-100-99
Spare filter (5 pieces)	671-200-05

Power cord standard, 3 m



Connection	Order no.
Earthing-pin	640-044-05
IEC connector	230-500-15
Without plug for fixed connection	230-500-16

Power cord 3 m with thermostat 0 - 60 °C



Connection	Order no.
Earthing-pin	230-500-04
IEC connector	230-500-05
Without plug for fixed connection	230-500-06

Roof ventilation unit "Silent" for TiRAX cabinet system

- This roof ventilation unit "Silent" distinguishes by its low noise level and large airflow.
- Due to these features it may be a good alternative to a climate control unit.
- The low noise level of the roof ventilation unit enables it for office application. The rear of the top cover offers a **break-out possibility for a cable entry** (a).

Material:
sheet metal
Finish:
RAL 7035 light grey
Delivery:
roof including fan and mounting material

A sufficient volume of air inlet, e.g. in the bottom area or via a base with ventilation slots needs to be taken in consideration. A deficiency of the same may reduce efficiency of ventilation.



The rear of the top cover offers a **break-out possibility for a cable entry** (a).

Technical information

Airflow (unimpeded)	1545 m^3/h
Noise level	40 dB (A)
Operating voltage/frequency	230 V / 50-60 Hz
Power consumption	68 W / 50 Hz
Size of roof unit (H x W x D)	228 x 551 x 551mm

Order no.

Description	Dimensions W x D x H	Order no.
Roof plate with fan	800 x 800 x 230	318-019-08
Roof plate with fan	800 x 1000 x 230	318-019-10
Roof plate with fan	800 x 1200 x 230	318-019-12
Brush set for cable entry (a)		316-111-10
Power lead (3 m) with thermostat 0-60 °C		230-500-04

Brush set for roof ventilation unit "Silent"

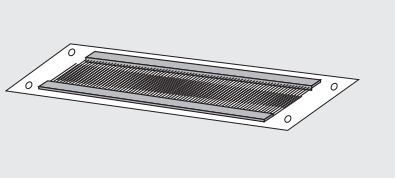

- for use in the perforated breakthrough of the roof ventilator "Silent"
- for use in the openings (a) of the roof
- Dimensions W x D: 365 x 120 mm

Order no.
316-111-10

Power lead 3 m with thermostat 0-60 °C



- for installation of the roof ventilation unit "Silent"

Order no.
230-500-04

12 Cover plates

The cover plates can be mounted directly on the cabinet rack [1] (top or base) according to the layout shown.

	Depth (D) 600 mm	**Depth (D)** 800 mm	**Depth (D)** 1000 mm	**Depth (D)** 1200 mm
(W) 600 mm	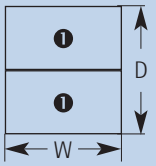	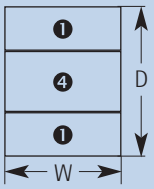	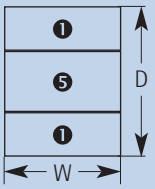	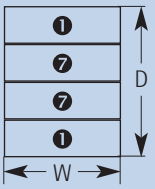
(W) 800 mm	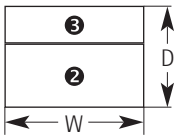	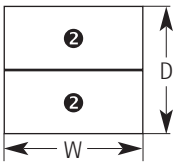	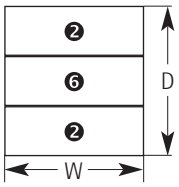	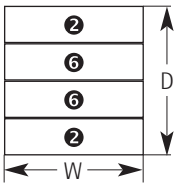

Cover plate, solid

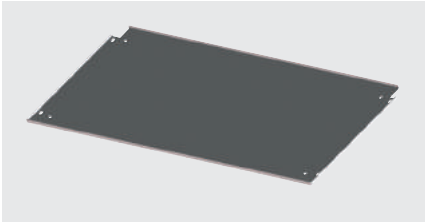

- individual break-throughs on request

Size	Order no.
1	318-111-01
2	318-111-02
3	318-111-03
4	318-111-04
5	318-111-05
6	318-111-06
7	318-111-07

Cover plate for fan base module



- cover plate for mounting of fan modules [pos. 11]
- also mountable with filter set 316-100-99

Size	Order no.
1	318-111-21
2	318-111-22

Cover plate for cable entry

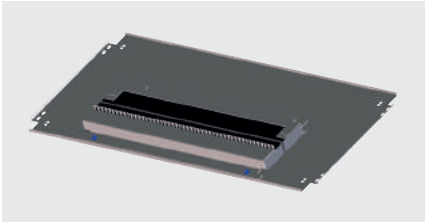

- cover plate for sealed cable entry
- suitable for CEE-plugs

Size	Order no.
1	318-111-25
2	318-111-26
5	318-111-37
6	318-111-38

Cover plate perforated

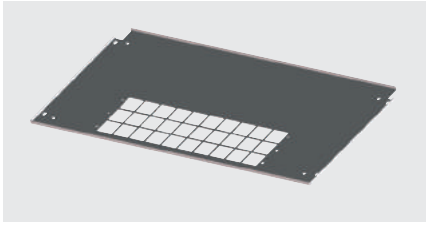

- extendable with filter set 316-100-99

Size	Order no.
1	318-111-23
2	318-111-24

13 19" vertical mounting

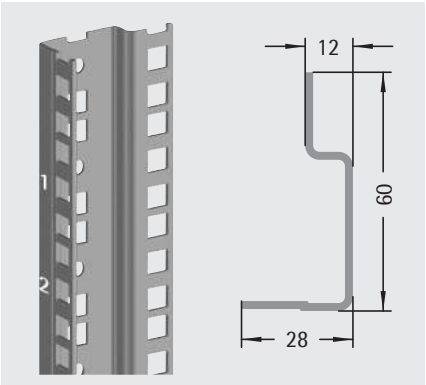

- ASA-perforation (½ 19" perforation)
- with U-labelling

Material:
sheet metal, galvanised

U	Order no.
6	316-120-06
12	316-120-12
15	316-120-15
19	316-120-19
24	316-120-24
33	316-120-33
37	316-120-37
42	316-120-42
46	316-120-46
48	316-120-48

14 Cross bar for 19" integration

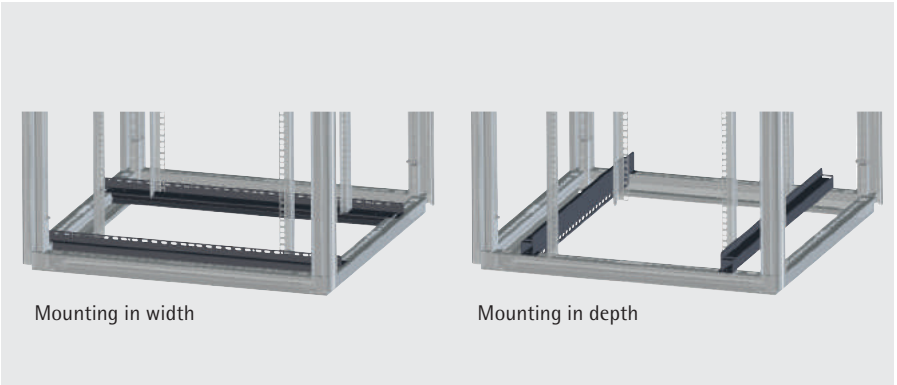

- to install the 19" vertical mountings two cross bars per 19" level are required
- steplessly depth adjustable
- at W = 800 mm the 19" level can be moved laterally
- in case of partial mounting, multipurpose crossbars (Pos. 15) are needed

Material:
sheet metal, galvanised

U	W = 600 mm	W = 800 mm	D = 1000 mm	D = 1200 mm
6	318-121-76	318-121-78	318-121-80	318-121-82
12	318-121-76	318-121-78	318-121-80	318-121-82
15	318-121-76	318-121-78	318-121-80	318-121-82
19	318-121-77	318-121-79	318-121-81	318-121-83
24	318-121-76	318-121-78	318-121-80	318-121-82
33	318-121-76	318-121-78	318-121-80	318-121-82
37	318-121-77	318-121-79	318-121-81	318-121-83
42	318-121-76	318-121-78	318-121-80	318-121-82
46	318-121-77	318-121-79	318-121-81	318-121-83
48	-	318-121-70	318-121-72	318-121-74

www.apra.de

Mounting plate

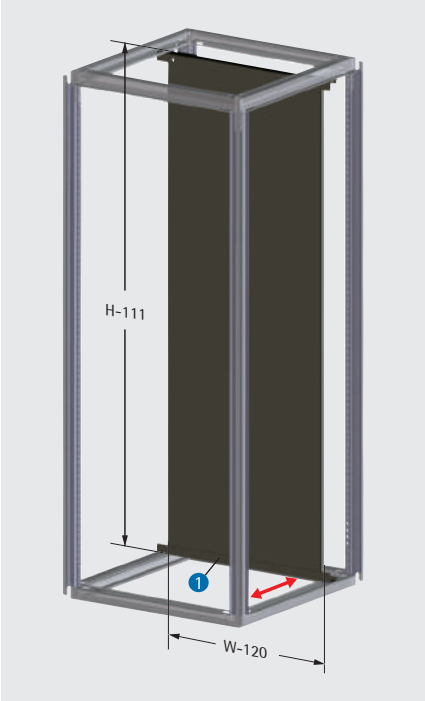

- for mounting heavy components and top hat rails
- is mounted on the cabinet with mounting rails [1] and can be pushed in laterally
- option to adjust the depth in 25mm steps
- multi-purpose crossbars (Pos. 15) are needed for partial mounting

Material:
sheet metal, galvanised

Height (H) mm	Order no. W=600 mm	Order no. W=800 mm
1200	318-130-12	318-130-32
1600	318-130-16	318-130-36
1800	318-130-18	318-130-38
2000	318-130-20	318-130-40
2200	318-130-22	318-130-42

15 Multi-purpose crossbar

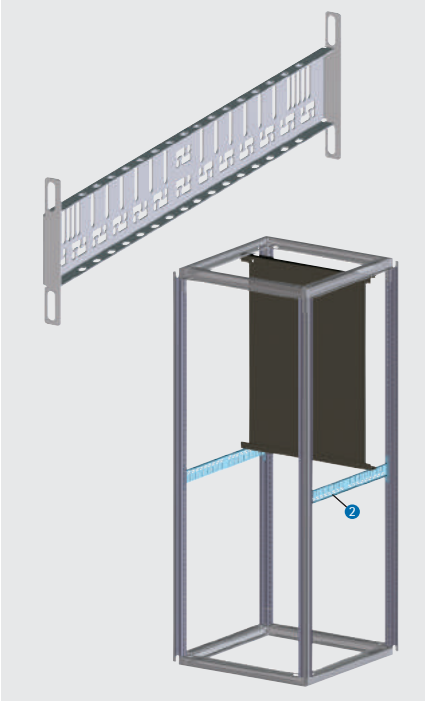

- for 19" partial mounting
- for clean cable entry
- infinitely depth adjustable
- Delivery: 1 piece

Material:
sheet metal, galvanised

Depth (D) / Width (W) mm	Order no.
600	318-120-06
800	318-120-08
1000	318-120-19
1200	318-120-23
500 - 850 (extendable)	318-122-40
700 - 1050 (extendable)	318-122-44

16 Reduction crossbar

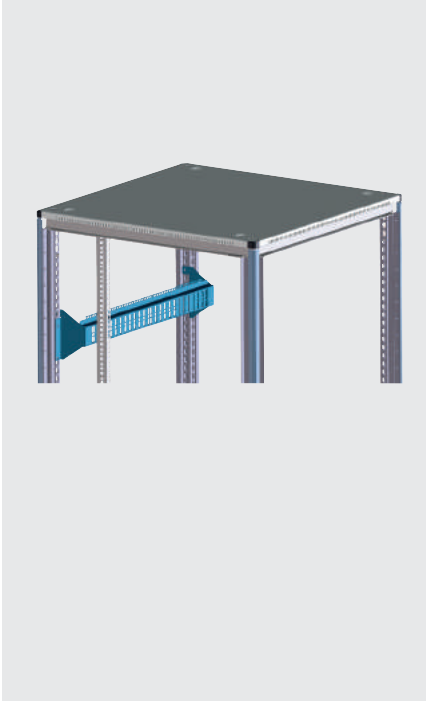

- reduces W = 800 mm to 19"
- with integrated cable management bracket
- can be hung up or screwed on

Material:
sheet metal, galvanised

Depth (D) / Width (W) mm	Order no.
600	318-120-10
800	318-120-12
1000	318-120-14
1200	318-120-21

180° hinge kit for pivot frame



- to increase the pivot angle of the 19" pivot frame to 180°

Order no.
318-129-20

19" pivot frame



- for cabinet width 800 mm
- pivot angle 95°
- installation centric or asymmetrical

Material:
sheet metal
Finish:
RAL 7035 light grey
Load capacity:
250 kg
Delivery:
incl. crossbars

U	Order no.
21	318-129-24
39	318-129-30

17 Cable guarding rail

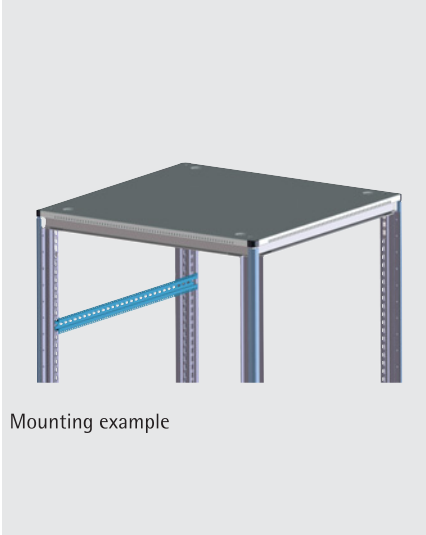

Mounting example

- with integrated cable management bracket
- holds cables in place with cable ties and cable clips

Material:
Aluminium, anodised
Delivery:
mounting material included

Cable clamps can be found on page 167.

Depth (D) / Width (W) mm	Order no.
600 mm	318-121-10
800 mm	318-121-11
Adapter for 1000 mm	316-103-25

Cable clamp, metal (set)

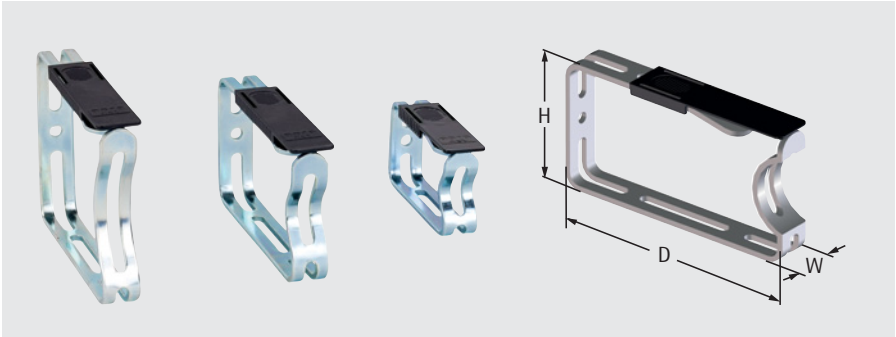

- for securing cables vertically to a 19" frame (for 800 mm wide cabinets)
- set = 10 pieces
- mounting material included

Dimensions (H x W x D) mm	Order no.
44 x 23 x 85	640-036-11
66 x 23 x 125	640-036-12
88 x 23 x 125	640-036-13

18 Viewing door

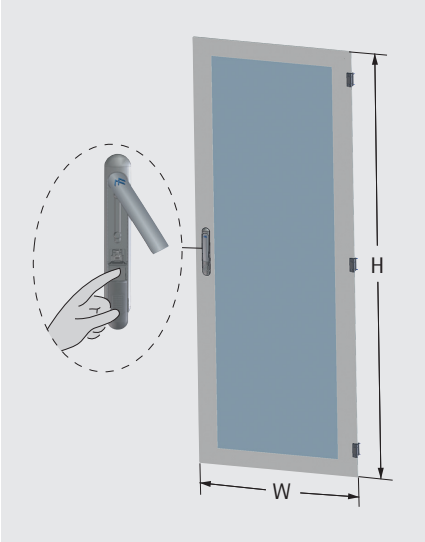

- with turning lever lock for profile half cylinder, L = 40 mm (with push button opening)

Material:
Frame: sheet metal
glass: toughened safety glass 4 mm, grey
Finish:
RAL 7035 light grey

Dimensions (H x W) mm	Order no.
1200 x 600	318-612-01
1200 x 800	318-812-01
1600 x 600	318-616-01
1600 x 800	318-816-01
1800 x 600	318-618-01
1800 x 800	318-818-01
2000 x 600	318-620-01
2000 x 800	318-820-01
2200 x 600	318-622-01
2200 x 800	318-822-01

19 Viewing door, split

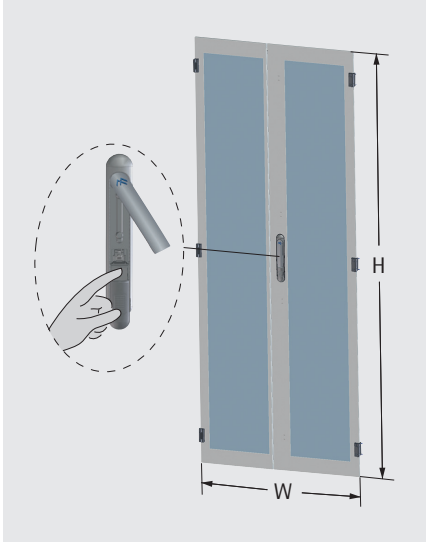

- with turning lever lock for profile half cylinder, L=40 mm (with push button opening)

Material:
frame: sheet metal,
glass: toughened safety glass 4 mm, grey
Finish:
RAL 7035 light grey

Dimensions (H x W) mm	Order no.
2000 x 800	318-820-08
2200 x 800	318-822-08

20 Door, solid

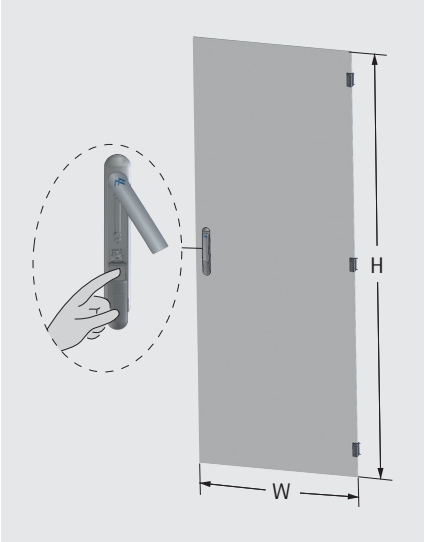

- with turning lever lock for profile half cylinder, L=40 mm (with push button opening)

Material:
sheet metal
Finish:
RAL 7035 light grey

Dimensions (H x W) mm	Order no.
1200 x 600	318-612-02
1200 x 800	318-812-02
1600 x 600	318-616-02
1600 x 800	318-816-02
1800 x 600	318-618-02
1800 x 800	318-818-02
2000 x 600	318-620-02
2000 x 800	318-820-02
2200 x 600	318-622-02
2200 x 800	318-822-02

apra net
www.apra.de

21 Split door, solid

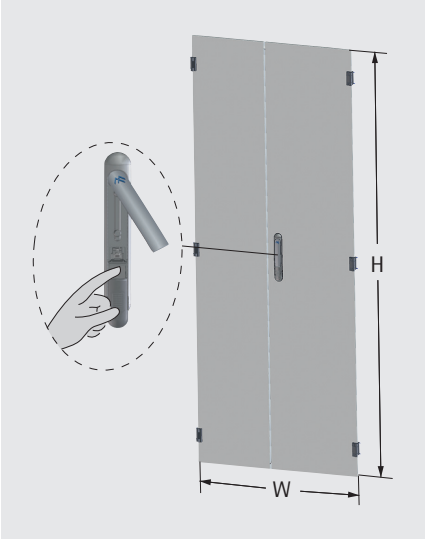

- with turning lever lock for profile half cylinder, L=40 mm (with push button opening)

Material:
sheet metal
Finish:
RAL 7035 light grey

Dimensions (H x W) mm	Order no.
2000 x 800	318-820-26
2200 x 800	318-822-26

22 Door, perforated

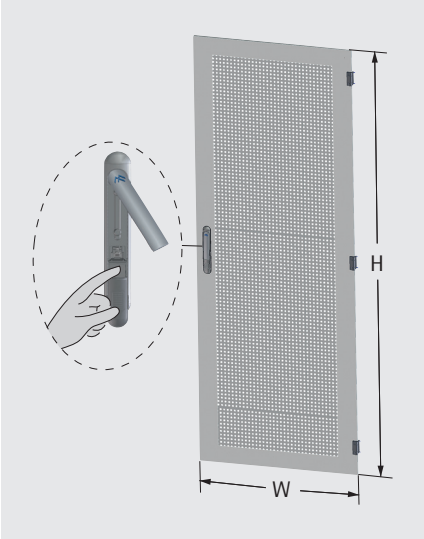

- perforation (83 %)
- with turning lever lock for profile half cylinder, L=40 mm (with push button opening)

Material:
sheet metal, perforated insert
Finish:
RAL 7035 light grey

Dimensions (H x W) mm	Order no.
1200 x 600	318-612-16
1200 x 800	318-812-16
1600 x 600	318-616-16
1600 x 800	318-816-16
1800 x 600	318-618-16
1800 x 800	318-818-16
2000 x 600	318-620-16
2000 x 800	318-820-16
2200 x 600	318-622-16
2200 x 800	318-822-16

23 Split door, perforated

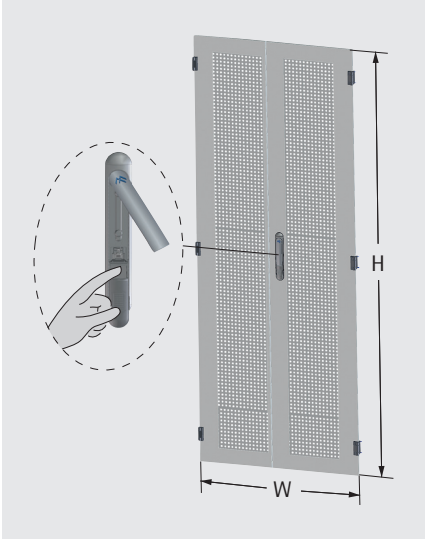

- perforation (83 %)
- with turning lever lock for profile half cylinder, L=40 mm (with push button opening)

Material:
sheet metal, perforated insert
Finish:
RAL 7035 light grey

Dimensions (H x W) mm	Order no.
2000 x 800	318-820-25
2200 x 800	318-822-25

www.apra.de

24 Sash door

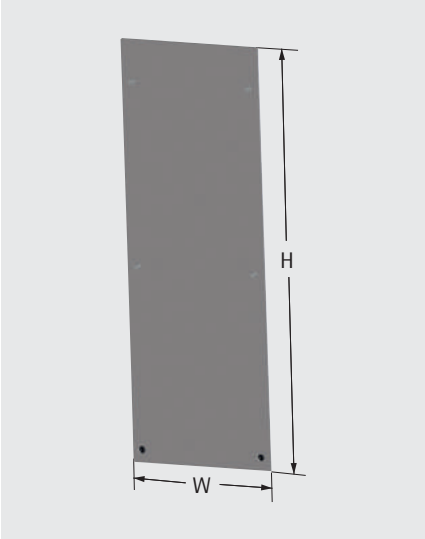

- with 2 or 4 sash fasteners and "double bit key 5 mm" mechanism

Material:
sheet metal
Finish:
RAL 7035 light grey

Dimensions (H x W) mm	Order no.
1200 x 600	318-612-03
1200 x 800	318-812-03
1200 x 1000	318-012-03
1600 x 600	318-616-03
1600 x 800	318-816-03
1800 x 600	318-618-03
1800 x 800	318-818-03
2000 x 600	318-620-03
2000 x 800	318-820-03
2000 x 1000	318-020-03
2000 x 1200	318-020-48
2200 x 600	318-622-03
2200 x 800	318-822-03
2200 x 1000	318-022-03
2200 x 1200	318-022-48

25 Locking systems for doors

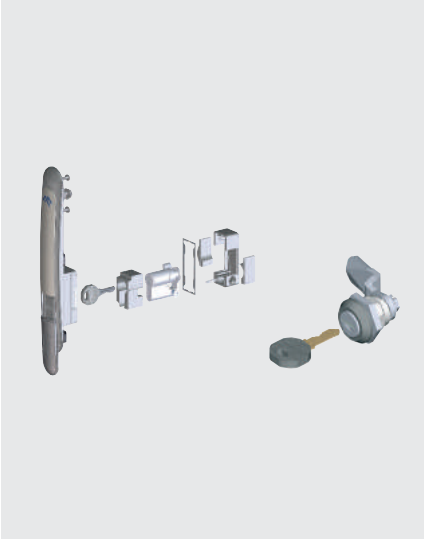

- **profile semi-cylinde**r L = 40 mm with EK 333 closing for turning lever lock of doors pos 18 - 23
- **adapter** for installing a profile semi-cylinder with L = 40 mm acc. to DIN 18252
- **sash fastener** with EK 333 closing for locking the sash door pos. 24

Description	Order no.
profile semi-cylinder	676-316-00
cylinder sash fastener	676-181
Adapter	676-316-10
Sapre key EK 333	676-200

Front cover set for 600 mm wide cabinets

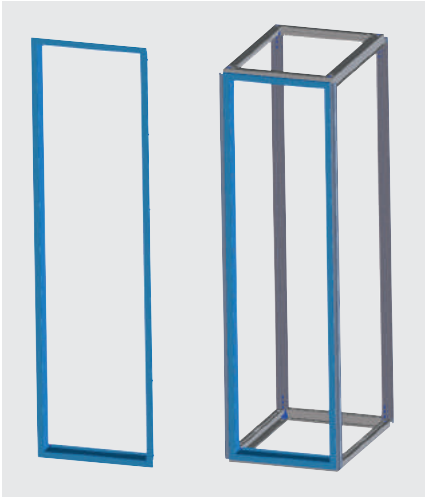

- for covering the cabinet frame up to the 19 "level

Finish:
RAL 7035 light grey

The front cover set can only be mounted **without the use of a front door!**

Dimensions (H x W) mm	Order no.
1000 x 600	318-610-22
1200 x 600	318-612-22
1600 x 600	318-616-22
1800 x 600	318-618-22
2000 x 600	318-620-22
2200 x 600	318-622-22

26 a/b Universal modules

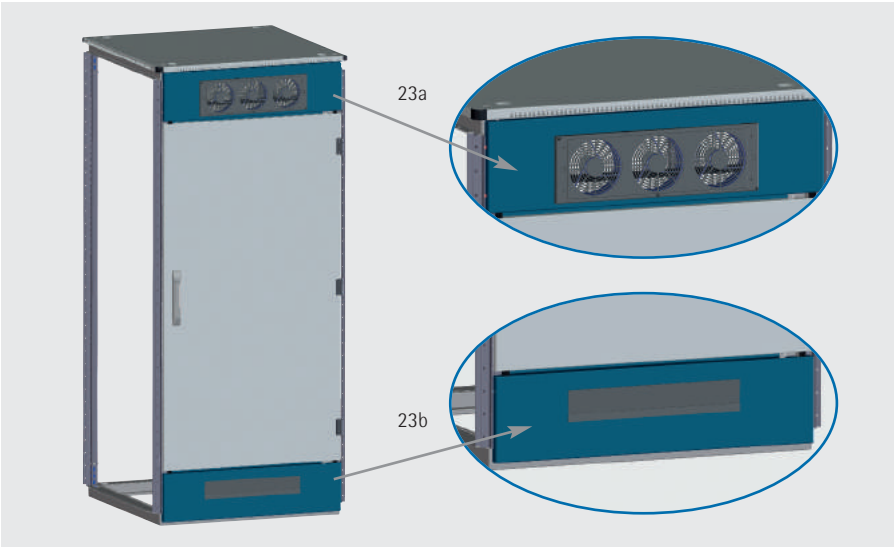

- can be used with shortened doors [18] - [23] or sash doors [24]
- modules can be positioned freely above and/or below the doors shortened by 200 mm
- the fan installation module [26 a] is suitable for use with the basic fan module [11]

Ausführung	Description	W / D mm	Order no.
26a	Fan installation module	600	318-700-00
26a	Fan installation module	800	318-800-10
26b	Cable entry module	600	318-600-02
26b	Cable entry module	800	318-800-02

27 Cabinet connection set IP 20

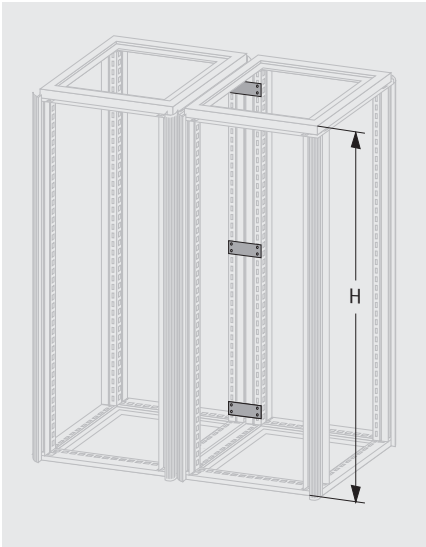

- for connecting as many cabinets as required next to or behind each other
- the design profile of the cabinet remains unchanged

Delivery:
connecting plates, clip-on seals; assembly material included

Order no.
318-105-10

28 Earthing set TiRAX

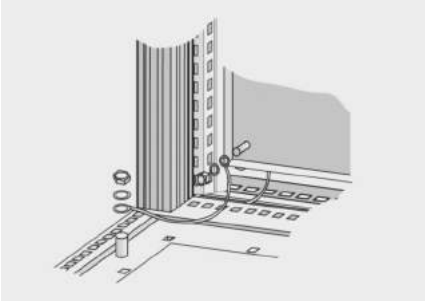

- for earthing according to VDE standards
- for conductive connection of the cabinet's components (cable cross section 2,5 mm²)

Order no.
318-150-00

Door contact switch

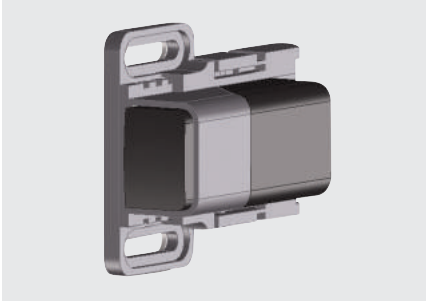

- for switching IEC connector etc. on and off
- mounting material included

Order no.
640-071-00

Terminal box

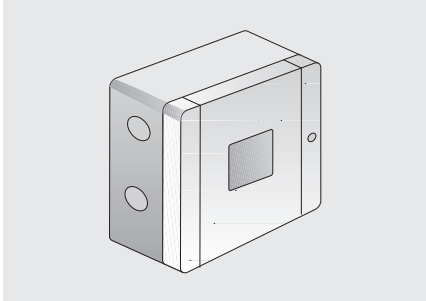

- for use as a cable distribution socket
- simple and quick installation

Order no.
640-059

www.apra.de

Screw set M 5 / M 6 / Torx (50×)

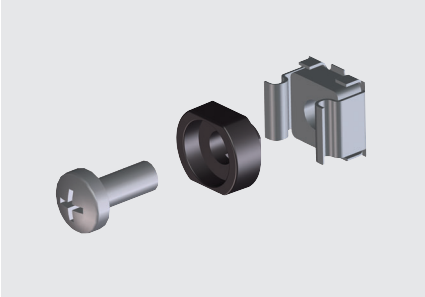

- necessary for mounting of 19" components into racks or enclosures
- consisting of:
  - 50 lens head srecws M 5 x 12 / M 6 x 16
  - 50 cage nuts M 5 - 8 / M 6 - 8
  - 50 rosettes for screws M 5 / M 6, with standards flattened

Description	Order no.
M 5	630-991
M 6	630-994
Torx M 6	350-001-20

TiRAX screw set

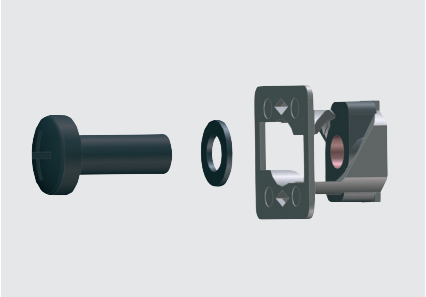

- can be inserted circumferentially in the TiRAX cabinet rack

Delivery:
each with 20× special cage nuts M 6, lens head screw M 6 × 16 and washer

Order no.
630-998

19" plug-in nut M5

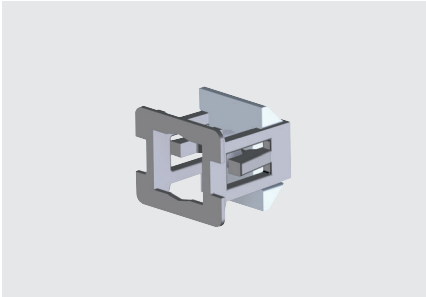

- For mounting in 19" grid rails with a standard breakthrough 9,5 x 9,5 mm (square perforation)

material:
Threaded insert, galvanised steel
Plastic housing:
PA (UL-certificate)

Finish: plastic (black)
thread use: galvanized

Description	Order no
set 4-fold	631-555-04
set 50-fold	631-555-50

Slide rail, variable depth

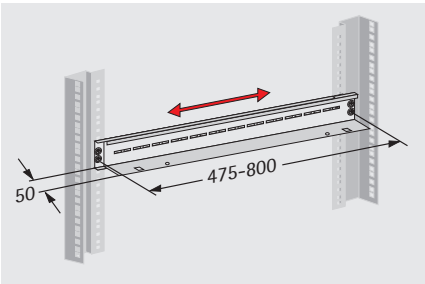

- for 19" plug-in units irrespective of the clearance to the 19" levels
- depth-adjustable
- for use as of a cabinet depth of 800 mm
- Delivery: 1 pair

Material:
sheet metal 1,5 mm, galvanised
Load capacity:
50 kg

Order no.
316-544-20

Slide rail, short for 19" vertical mountings and pivot frames

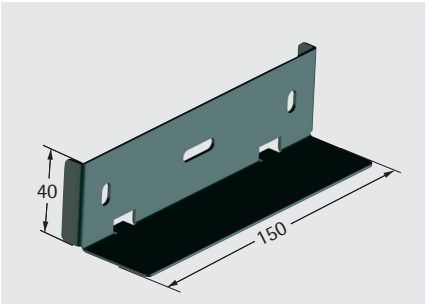

- with only **one** 19" level or pivot frame
- delivery: 1 pair

Material:
sheet metal, 2 mm galvanised
Load capacity:
15 kg
Delivery:
includes mounting material

Order no.
318-129

Slide rail, screwable / hook-in

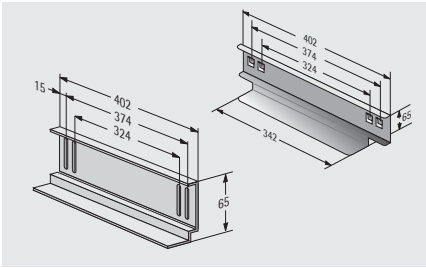

- **screwed/hooked** in onto 19" vertical mountings
- to support heavy 19" plug-in units
- two 19" levels are required for mounting
- Delivery: 1 pair

Material:
sheet metal, galvanised
Load capacity:
50 kg

Description	Order no.
screwable	312-544
hook-in	316-544-00

29 19" Potential equalisation bar 1 U

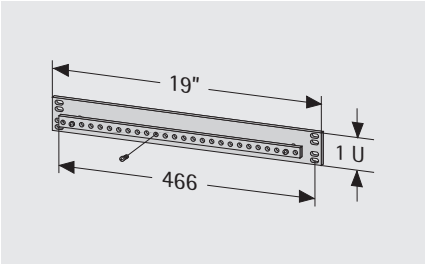

- for 19" or cabinet rack installation
- connection options: 27 × M 5
- rail cross-section: 50 mm²

Material:
sheet metal, copper

Order no.
640-028-00

29 Potential equalisation bar 1 U

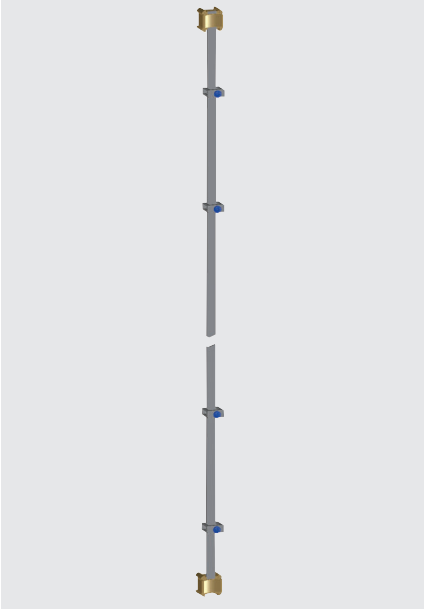

- 30 mm² inkl. 10 pull bows
- mounting material included

L mm	Order no.
2000	640-028-08
1800	640-028-10

Noise absorption foam



- absorbs up to 10 dB(A) of sound in enclosures (e.g. fan noise)
- self-adhesive on one side
- thermal conductivity: 0.033 W/mk (acc. to DIN 52612)
- temperature range: –40 °C to +100 °C

Material:
grey PUR ester foam (10 mm), with indentations, partially compressed (air permeable)
Delivery: unmounted
Delivery: 1 m²

If required, we will be happy to affix the noise absorption foam for you before delivering your cabinets or enclosures!

Order no.
671-211

LED cabinet lamp



- cost-optimised LED technology with a power consumption of 5 W (light intensity equivalent to a 75 W light bulb)
- internal power supply unit with wide range voltage 100 - 230 V / AC
- long-life and no maintenance (service life at 20 °C = 60,000 h)
- available with switch or motion detector
- magnetic attachment for individual mounting in the cabinet
- pressure clamp connection

Connection sockets and connections must be ordered separately!

Description	Order no.
LED cabinet light with switch	640-143-05
LED cabinet light with motion detector	640-143-06
Connection with Euro plug, L = 2.5 m	640-143-08

www.apra.de

30 Shelf without 19" extension "fixed installation"

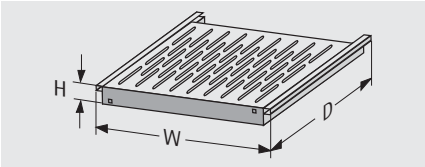

- for mounting into cabinet rack without 19" level
- extraction length: 500 mm
- max. cabinet depth: 800 mm

Material:
sheet metal
Finish:
RAL 7035 light grey
Load capacity:
80 kg (distributed load)
Dimensions (H x W x D):
1,5 U (66,5 mm) x 465 x 410 mm

Cabinet width	Order no.
600 mm	318-141-08
800 mm	318-141-05

30 Shelf without 19" extension "extractable"

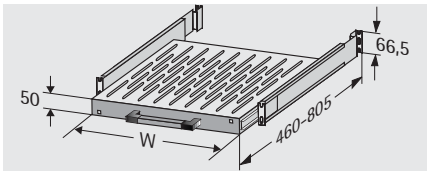

- for mounting into cabinet rack without 19" level
- simple one-person assembly
- extraction length: 500 mm
- max. cabinet depth: 800 mm

Material:
sheet metal
Finish:
RAL 7035 light grey
Load capacity:
60 kg (distributed load)
Dimensions (H x W x D):
1,5 U (66,5 mm) x 465 x 410 mm
1,5 U (66,5 mm) x 665 x 410 mm

Cabinet width	Order no.
600 mm	318-141-04
800 mm	318-141-06

30 19" shelf 2U "fixed"

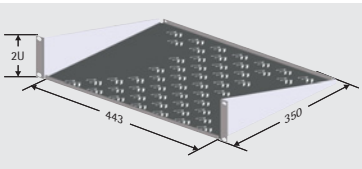

- simple assembly on a 19" grid (only one 19" level required)
- ventilated
- Footprint: 443 x 350 mm

Material:
sheet metal
Finish:
RAL 7035 light grey
Load capacity:
15 kg (distributed load)
Dimensions (H x W x D):
2 U (88 mm) x 19" (482,6 mm) x 350 mm
Floor space (w x d):
443 x 350 mm

Order no.
315-810-20

30 19" shelf 1 U "VARiplain" fixed installation with 19" grid

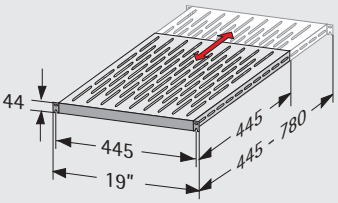

- depth variable due to VARiplain technology
- telescopic: 445 - 780 mm (see fig.)
- simple one-person assembly through open long hole in the 19" front (hook-in)
- mounting material included

Material:
sheet metal 2 mm
Finish:
RAL 7035 light grey
Load capacity:
150 kg (distributed load)

Dimensions (H x W x D):
1 U (44 mm) x 19" (482,6 mm) x 445 - 780 mm
Floor space (w x d):
445 x (445 - 780) mm
Delivery:
mounting material included

Order no.
316-036-99

30 19"-shelf 1,5 U "extractable"

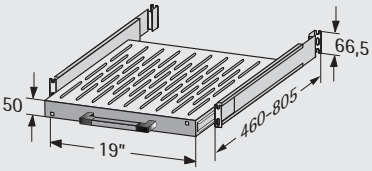

- variable-depth installation
- extraction 500 mm
- simple one-person assembly

Material:
sheet metal
Finish:
RAL 7035 light grey
Load capacity:
60 kg (distributed load)
Dimensions (H x W x D):
1,5 U (66,5 mm) x 19" (482,6 mm) x 465 - 665 mm
Floor space (w x d):
410 x (465 - 665) mm

D mm	Order no.
465	318-141-00
665	318-141-01

Cable duct

- structured, lateral cable routing over the entire cabinet height
- optionally breakable, large breakouts for side and rear cable entry or execution, retrofittable with plastic edge protection frame
- stable front plastic cable clamps each U for defined cabling in front of the 19" level
- lockable on the front side by pivoting hinged covers
- additional cable fixing in the rear maneuvering area by pluggable cascading
- no impairment of the air flow in the cabinet
- increased clarity
- symmetrical construction (can be mounted in the cabinet on the right and left side)

Material:
duct: sheet metal
hinged cover: aluminum
cable clamps and hinges:
plastic UL94 V-0, black
Finish:
sheet panel: RAL 7035 light grey or
RAL 9005 deep black
Delivery:
duct with cable clamps and drop shutter, mounting material included

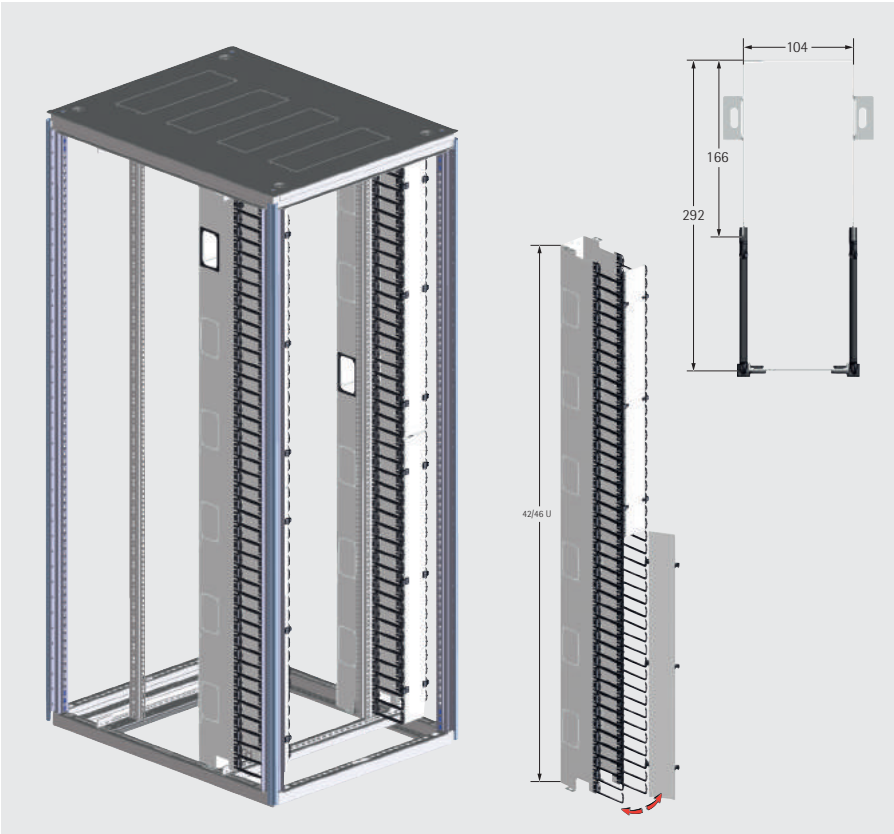

U	H mm	Colour	Order no.
42	2000	RAL 7035 light grey	318-123-50
42	2000	RAL 9005 jet black	318-123-55
46	2200	RAL 7035 light grey	318-123-60
46	2200	RAL 9005 jet black	318-123-65

Cascading for cable duct

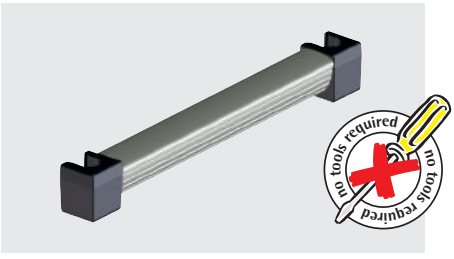

- for partially locking the excess-lenght section of the cable duct
- can be quickly and easily installed on each of the cable clamps, no tools required
- pluggable, rotatable
- set = 5 pieces

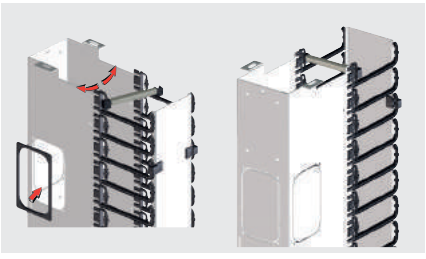

Material:
Aluminum profile,
hinges: plastic UL94 V-0, black
Delivery:
5 pieces Al profile incl. hinge, right and left

Order no.
318-123-90

Edge protection frame "apra"

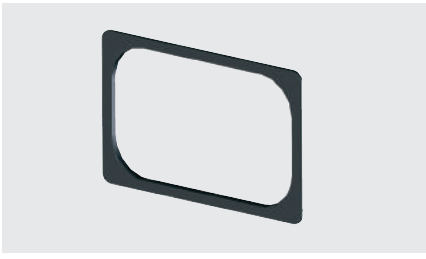

- can be clipsed into the pre-perforated cut-outs (lateral or rear of cable duct)
- set = 10 pieces

Material:
plastic UL94 V-0, black

Order no.
583-001-10

www.apra.de

Partition panel kit

- to partition the lateral movable space for 800 mm wide cabinet between 19" level and side panel
- 3 × 1 U field per panel
- with cable clamps [a] (max. 4 pieces per panel) extendable (see page 50)

Material:
sheet metal

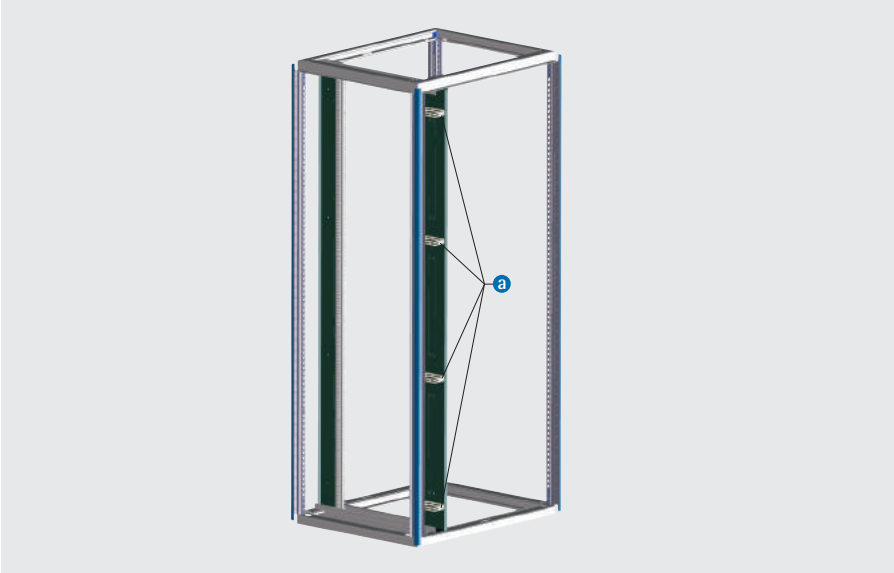

H mm	Finish	Order no.
2000	RAL 7035	318-121-84
2000	RAL 9005	318-121-85
2200	RAL 7035	318-121-87
2200	RAL 9005	318-121-88

Corridor cover for cooling corridor

- for easy mounting on the cabinet system
- with 19" 3 U mounting section for power distributors, light systems etc.
- with toughened safety glass
- for aisle width 1.2 m

Material:
sheet metal, toughened safety glass

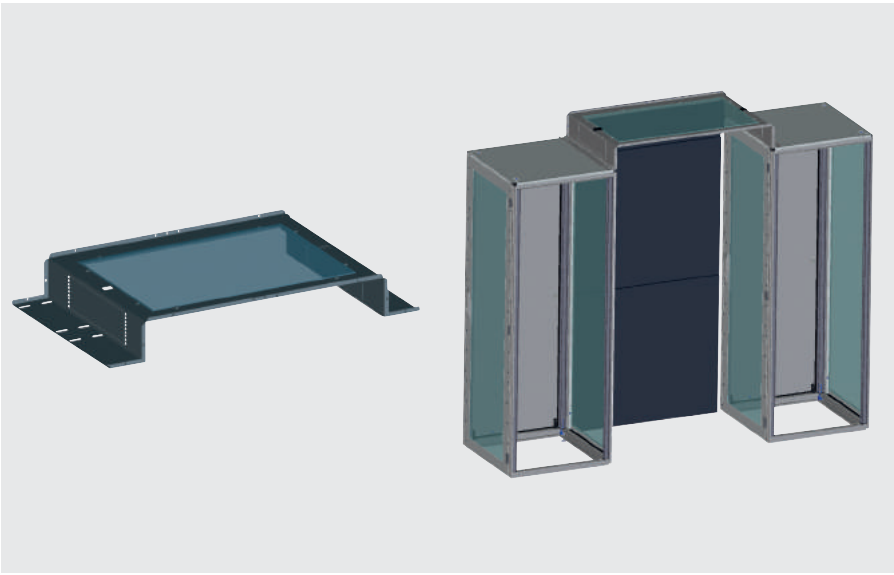

W mm	Finish	Order no.
800	RAL 7035	318-124-32
600	RAL 7035	318-124-66
600	RAL 9005	318-124-67
800	RAL 9005	318-124-75

Corridor cover with LED panel

- easy installation on the TiRAX cabinet systems
- for optimum illumination of the cold / warm aisle
- LED panel with 24 W, 6000 K, 2400 lm
- incl. 19 "panel 3 U for mounting power distributions etc.
- for aisle width 1.2 m

Material:
Corridor cover: steel sheet
LED-Panel: aluminium, acryl

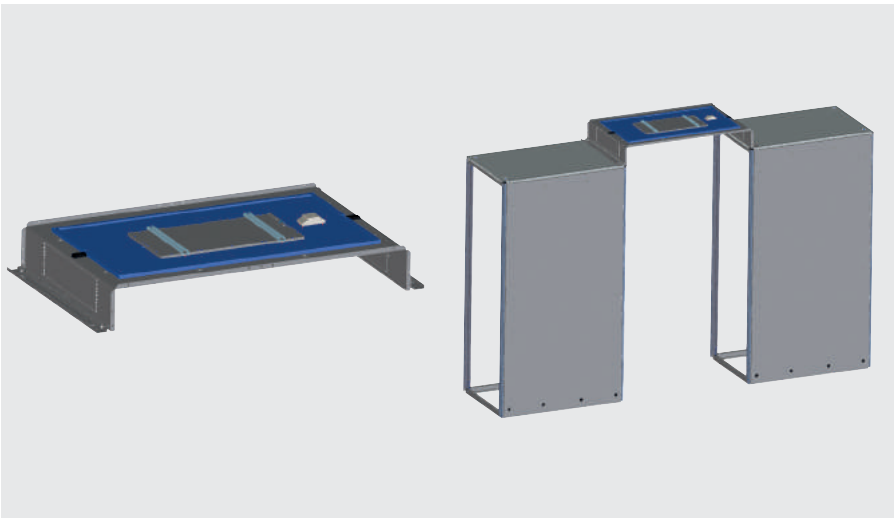

W mm	Finish	Order no.
800	RAL 7035	318-125-60
800	RAL 9005	318-125-65

Technical changes and errors reserved. Pictures may be different from the product.

Swing door system

- to finish a TiRAX cold / warm aisle housing
- Opening possibility in both directions
- 180 ° opening angle for optimum access
- Ensuring pressure equalization in the cold aisle (for example, when the extinguishing system is triggered)
- High energy efficiency, as the cold aisle is always closed automatically
- Protection of persons in dangerous situations (escape door)
- for aisle width 1200 mm and cabinet height H = 2000 mm (42 U)

Material:
Mounting frame: sheet metal
Door profiles: aluminum, tempered glass
Delivery:
1 door pair, incl. mounting frame

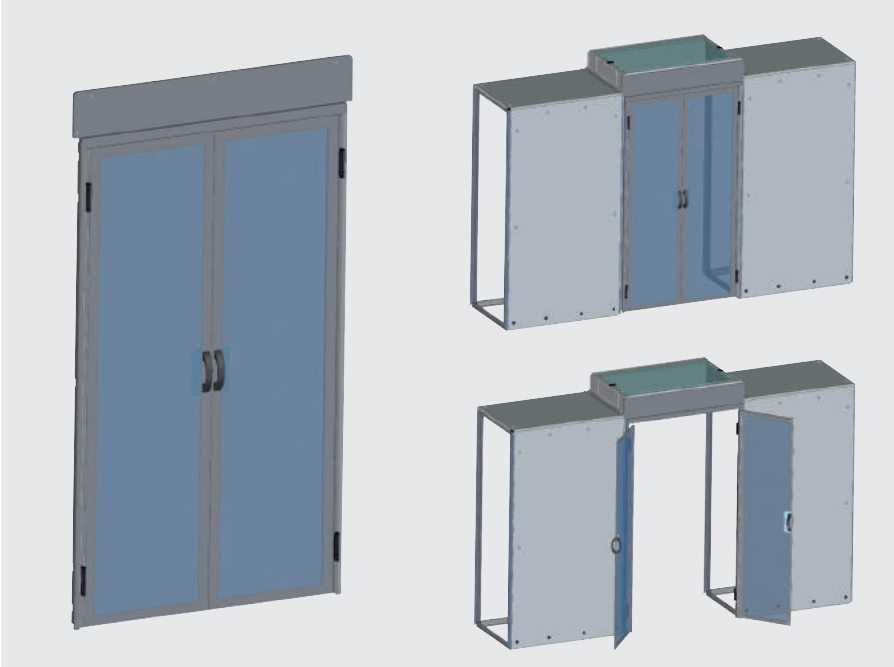

Finish	Order no.
RAL 7035 / aluminium look	318-004-70
RAL 9005 / aluminium look	318-004-50

Sliding door system

- for cabinet depth D = 1200 mm
- simple and quick installation
- for aislewidth 1.2 m
- height adjustment towards floor is possible

Material:
sheet metal, toughened safety glass

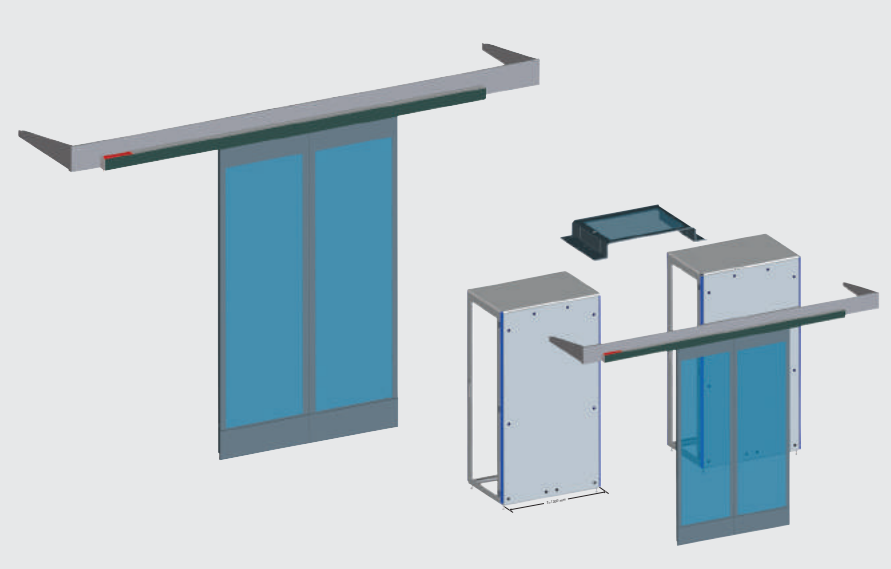

H mm	Description	Finish	Order no.
2000	manual	RAL 7037 dusty grey	318-124-70
		RAL 9005 jet black	318-124-80
	electric	RAL 7037 dusty grey	318-125-00
		RAL 9005 jet black	318-125-05
2200	manual	RAL 7037 dusty grey	318-124-55
		RAL 9005 jet black	318-124-65
	electric	RAL 7037 dusty grey	318-125-10
		RAL 9005 jet black	318-125-15

www.apra.de

Extension set synchronous run for sliding door system

- for synchronous opening or closing of both door leaves
- to extend the manual sliding door system

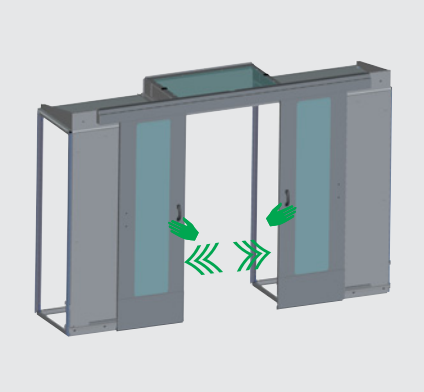

Order no.
583-003-36

Extension set synchronous operation with linear feedback

- synchronous opening of both door leaves with independent closing
- mechanical return system
- high energy efficiency, as the cold aisle is always closed automatically
- to extend the manual sliding door system

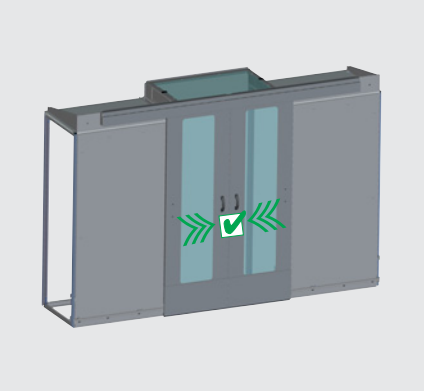

Order no.
583-008-62

Corridor Backboard Set

- Set = 2 pieces rear panels, incl. mounting brackets and completion of the corridor cover
- horizontally split mounting
- to complete a cold / warm aisle housing for aisle width 1200 mm

Material:
sheet steel
Finish:
RAL 7035 light grey
RAL 9005 jet black

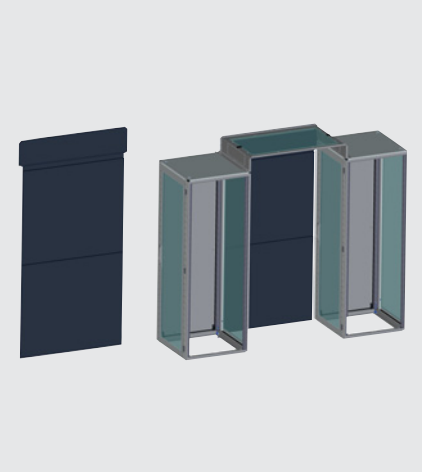

Finish	H = 2000	H = 2200
RAL 7035	318-125-80	318-125-70
RAL 9005	318-125-86	318-125-66

From conceptual planning to installation

Exploded
Tirax-cabinet system

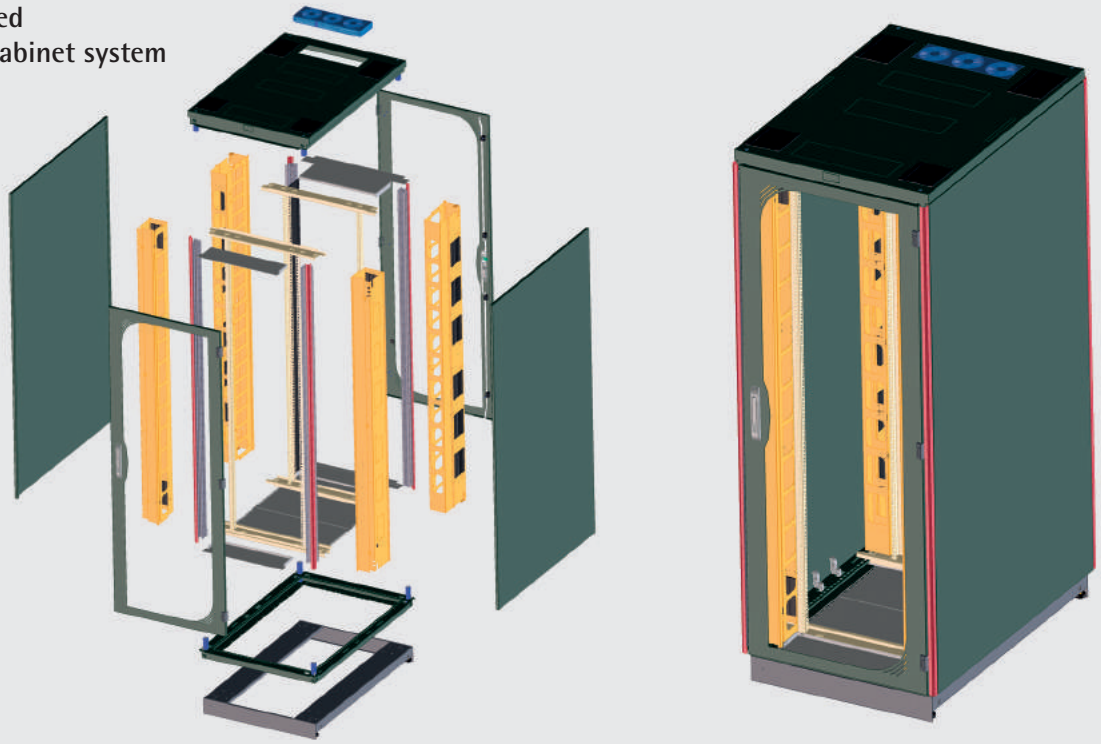

Project:
Datacenter



www.apra.de

in the data center – all from one source!











For your notes

Important notes:

Questions for the sales team:



19" cabinet system TiRAX page 11

19" cabinet system NETcell page 65

Open 19" racks page 83

Floor-standing / wall-mounted 19" enclosure system VARi IT page 97


Wall-mounting systems page 111


Air conditioning technology page 129


Power distribution page 137


Cabinet monitoring page 155


Cable management page 163


Distribution technology page 169


Accessories page 177



Read more about the apra-group's products at www.apra.de

www.apra.de

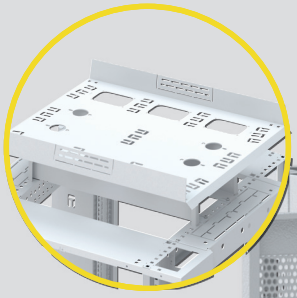

Überlength tray for
on-top cabling

Large-volume, integrated
cable ducts

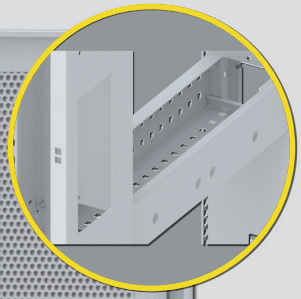

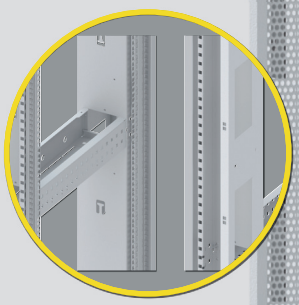

Integrated 19"/21" level
(ETSI-standard)

NETcell

completely dismountable,
flexible cable management,
payload up to 1500 kg,
utility model
protected

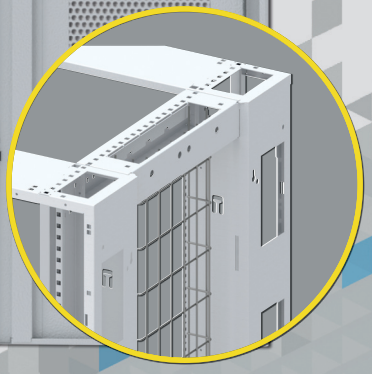

Flexible cable routing
via mesh ducts

www.apra.de

Select tu required cabinet components step by step:

Item	Description	page
1a	Basic system	68
1b	Connector system (without fig.)	68
2	Door divided perforated	69
3	Door split closed	69
4	Viewing door divided	69
5	Door perforated	69
6	Door closed	69
7	Transparent door	69
8	Side panel	70
9	Roof	70
10	Adjusting feet set	72
11	Base	72
12	Extra-long tub	72

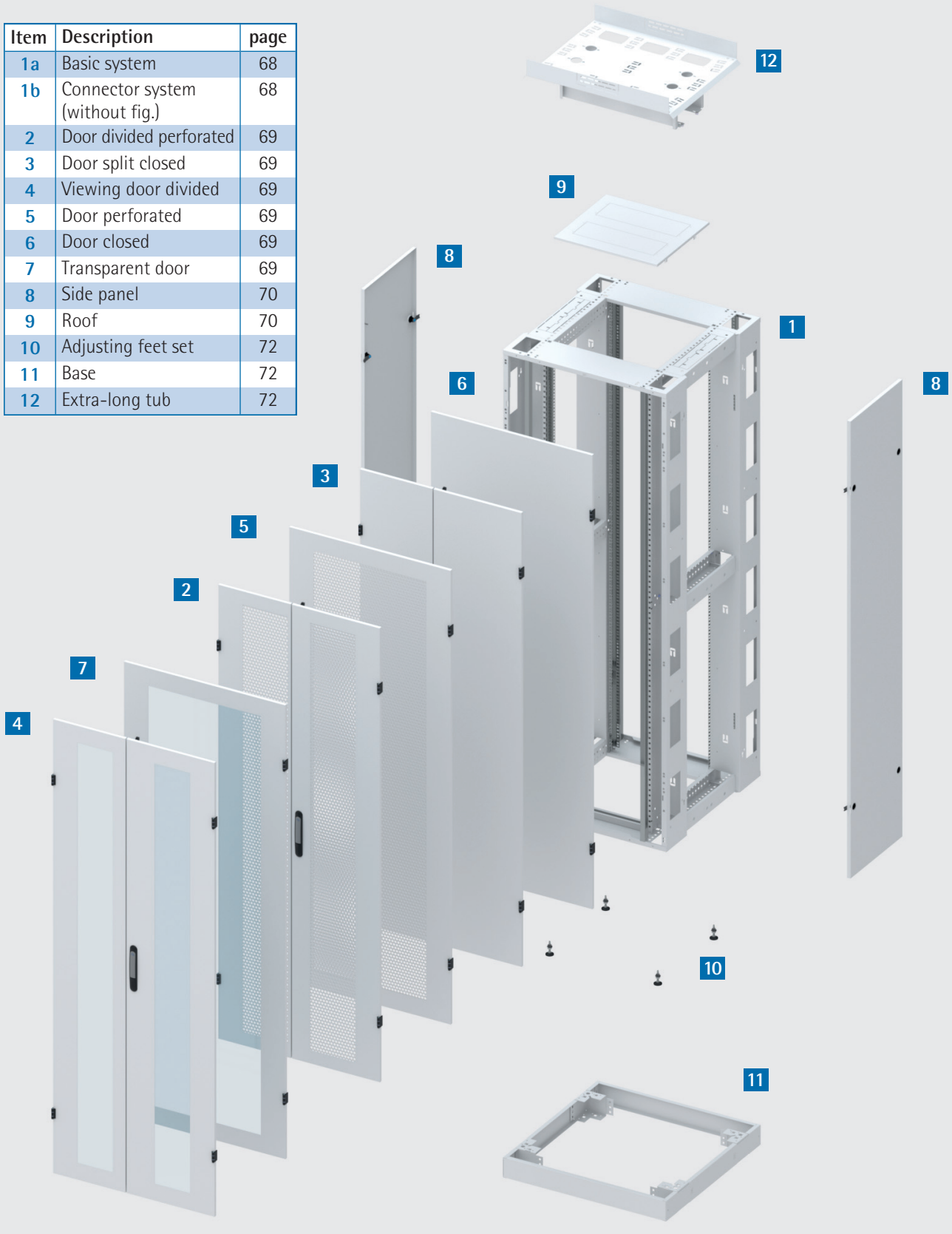

1a 19"/21" cabinet system NETcell "800" base system

Tu base system consists of two identical frames with integrated cable ducts, depth crossbars, and 19" expansion that can be offset in depth.

Base system consisting of:
- Frame with integrated cable ducts (2x) and 21" ETSI-Track
- Depth struts / cable tray (6x)
- 19" expansion in front and rear areas
- End panels (2x)

Material:
sheet metal

Colour:
RAL 7035 lightgrey

Load capacity:
1500 kg (static)

Delivery: mounted



U	Hight mm	Width mm	Depth mm	Order no.
43	1980	800	600	582-806-10
43	1980	800	800	582-808-10
43	1980	800	1000	582-810-10
43	1980	800	1200	582-812-10
48	2200	800	600	582-806-12
48	2200	800	800	582-808-12
48	2200	800	1000	582-810-12
48	2200	800	1200	582-812-12

1b 19"/21" cabinet system NETcell "800" Rack system

Tu racking system consists of two identical frames, depth crossbars, and 19" expansion, which can be offset in depth.

Racking system "600" consisting of:
- Frame (2x)
- Depth struts (6x)
- 19" expansion in tu front and rear areas
- End panels (2x)

Material:
sheet metal

Colour:
RAL 7035 lightgrey

Load capacity:
1500 kg (static)
(only between two base systems)

Delivery:
assembled



U	Hight mm	Width mm	Depth mm	Order no.
43	1980	600	600	582-606-10
43	1980	600	800	582-608-10
43	1980	600	1000	582-610-10
43	1980	600	1200	582-612-10
48	2200	600	600	582-606-12
48	2200	600	800	582-608-12
48	2200	600	1000	582-610-12
48	2200	600	1200	582-612-12

www.apra.de

2 Split door, perforated



- with swivel lever lock for profile half cylinder, L = 40 mm (with key opening)
- 83 % perforated

Material:
sheet metal with perforated plate insert
Colour: RAL 7035 lightgrey

Hight	Order no.
43 U	582-820-25
48 U	582-822-25

3 Split door, closed



- with swivel lever lock for profile half cylinder, L = 40 mm (with key opening)

Material: sheet metal
Colour: RAL 7035 lightgrey

Hight	Order no.
43 U	582-820-26
48 U	582-822-26

4 Split viewing door



- with swivel lever lock for profile half cylinder, L = 40 mm (with key opening)
- Scuibe: ESG 4 mm, grau

Material: sheet metal
Colour: RAL 7035 lightgrey

Hight	Order no.
43 U	582-820-08
48 U	582-822-08

5 Perforated door



- with swivel lever lock for profile half cylinder, L = 40 mm (with key opening)
- 83 % perforated

Material:
sheet metal with perforated plate insert
Colour: RAL 7035 lightgrey

Width	Hight	Order no.
800	43 U	582-820-16
800	48 U	582-822-16
600	43 U	582-620-16
600	48 U	582-622-16

6 Door closed



- with swivel lever lock for profile half cylinder, L = 40 mm (with key opening)

Material: sheet metal
Colour: RAL 7035 lightgrey

Width	Hight	Order no.
800	43 U	582-820-02
800	48 U	582-822-02
600	43 U	582-620-02
600	48 U	582-622-02

7 Viewing door



- with swivel lever lock for profile half cylinder, L = 40 mm (with key opening)
- Scuibe: ESG 4 mm, grau

Material: sheet metal
Colour: RAL 7035 lightgrey

Width	Hight	Order no.
800	43 U	582-820-01
800	48 U	582-822-01
600	43 U	582-620-01
600	48 U	582-622-01

8 Side panels

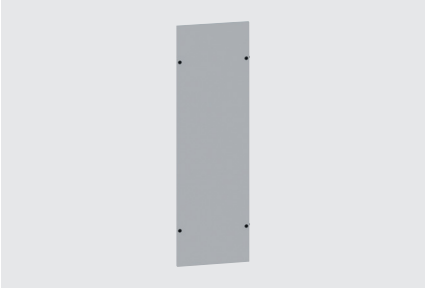

- with 4 sash locks (double-bit 5 mm operation)

Material: sheet metal
Colour: RAL 7035 lightgrey

Hight mm	Depth mm	Order no.
1980	600	582-620-03
1980	800	582-820-03
1980	1000	582-020-03
1980	1200	582-020-48
2200	600	582-622-03
2200	800	582-822-03
2200	1000	582-022-03
2200	1200	582-022-48

Locking systems for doors



- **profile semi-cylinder** L = 40 mm with EK 333 closing for turning lever lock on door Item 2-7
- **adapter** for installing a profile semi-cylinder with L = 40 mm acc. to DIN 18252
- **sash fastener** with EK 333 closing for locking tu side panel

Dimensions	Order no.
Profile half cylinder	676-316-00
Sash fastener	676-181
Adapter	676-316-10
Spare key EK 333	676-200
Three-point locking extension kit: H = 1980 mm	676-061-10
Three-point locking extension kit: H = 2200 mm	676-061-20

Bulkuad wall



- For insertion between two systems
- is used to easily isolate two systems from each otur

Material: sheet metal
Colour: galvanized

Hight mm	Depth mm	Order no.
1980	1000	582-020-04
1980	1200	582-220-04
2200	1000	582-022-04
2200	1200	582-222-04

9 Roof/floor insert

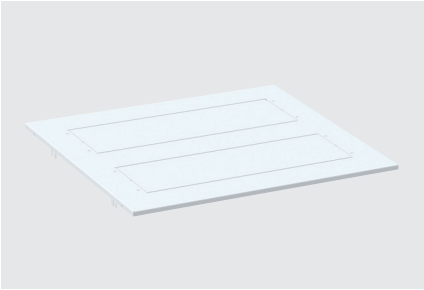

- contains two pre-stamped fields that are broken out for cable entry.

Material: sheet metal
Colour: RAL 7035 light grey

Depth mm	Order no.
600	582-033-29
800	582-033-28
1000	582-033-27
1200	582-033-26

Rail cover

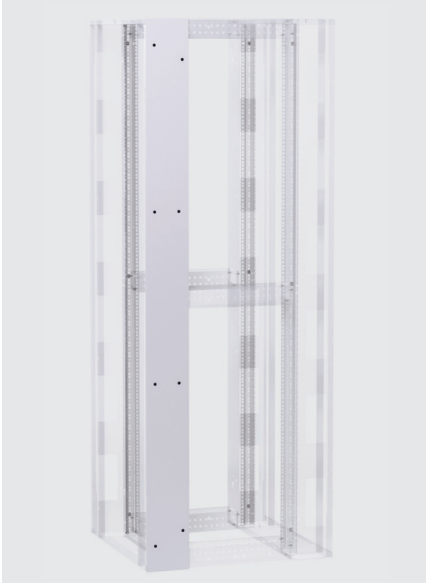

- For closing tu side openings in tu cable duct

Material: sheet metal
Colour: RAL 7035 light grey

Hight mm	Order no.
1980	583-008-45
2200	583-008-58

Brusus

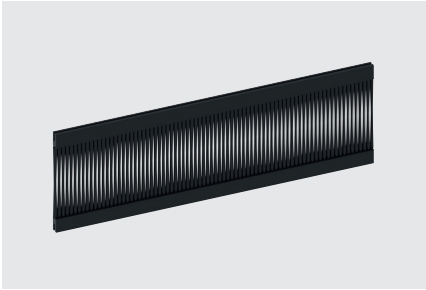

- For use in tu pre-perforated opening in tu roof
- Width: 365 mm
- Depth: 120 mm

Material: Plastic
Colour: black

Order no.
316-111-10

www.apra.de

Cable guide bracket

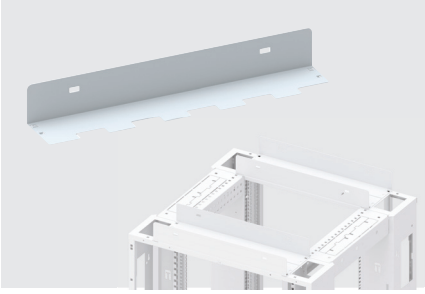

- are used for cable routing on tu enclosure system
- are mounted on tu roof without tools
- can be positioned individually in terms of depth
- can also be used as an end panel for tu overlength tray

Material: sheet metal
Colour: RAL 7035 light grey
Dimensions (H x D):
80 x 100 mm

B=300 mm	B=800 mm
582-001-03	582-001-08

Baying panel for cable routing bracket

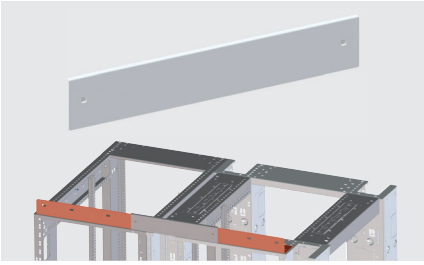

- for basic and baying systems
- for mounting in rows of enclosures
- for concealing between two cable routing brackets on tu front of tu enclosure systems

Material: sheet metal
Colour: RAL 7035 light grey

Order no.
582-001-01

10 Adjustable foot set

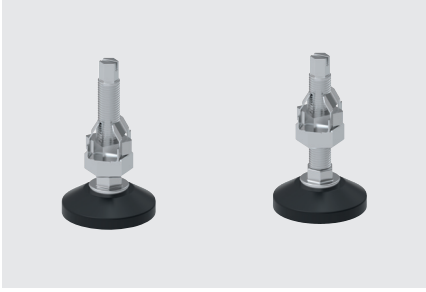

- for mounting on tu cupboard
- Adjustment range approx. 20 mm
- Basic hight 25 mm
- incl. mounting material
- Set = 4 pieces

Material: Steel, plastic
Colour: RAL 7035 light grey, black

Order no.
500-001-28

Brush set

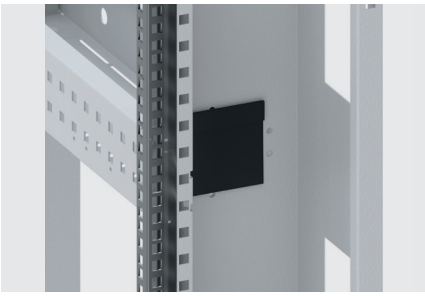

- for basic system
- used to lock a rack frame

Material: Plastic
Colour: black

Hight mm	Order no.
43 U	582-003-10
48 U	582-003-12

11 Base closed

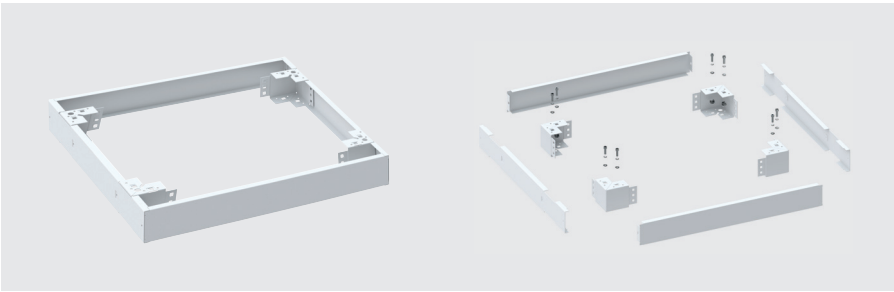

- for mounting on tu base and baying frame
- incl. monthly material

Material: sheet metal
Colour: RAL 7035 light grey
Hight: 100 mm

Width mm	Depth mm	Order no.
600	600	582-660-00
600	800	582-680-00
600	1000	582-610-00
600	1200	582-612-00
800	600	582-860-00
800	800	582-880-00
800	1000	582-810-00
800	1200	582-812-00

Baying connector set



- for baying basic or baying systems

Material: steel
Surface: galvanised

Order no.
583-901-18

19' sulf 1 U "VARiplain" fixed mounting with 19' grid

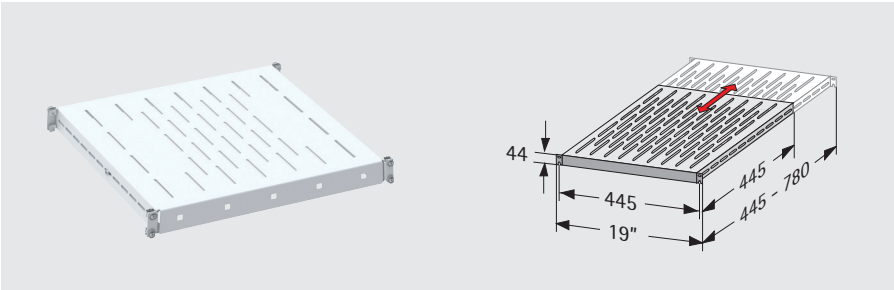

- Fixed installation
- Variable depth thanks to VARiplain technology
- telescopic: 445 - 780 mm (see diagram)
- Simple one-man assembly thanks to open slot in tu 19' front (can be hooked in)
- With mounting material

Material:
sheet metal 2 mm
Surface:
RAL 7035 light grey
Load capacity:
150 kg (Area load/static)

Dimensions (H x W x D):
1 U (44 mm) x 19" (482,6 mm) x 445 - 780 mm
Stellfläcu (b x t):
445 x (445 - 780) mm
Delivery: with mounting material

Order no.
316-036-99

19" cable management panel with metal brackets



- with 4 metal cable routing brackets and plastic fasteners
- for organised and horizontal cable routing in tu 19" level
- incl. mounting material

Material: sheet metal
Colour: RAL 7035 light grey
Dimensions (H x B x T):
44 x 482,60 x 90mm
U: 1U

Order no.
213-145-41

Slide rail variable depth

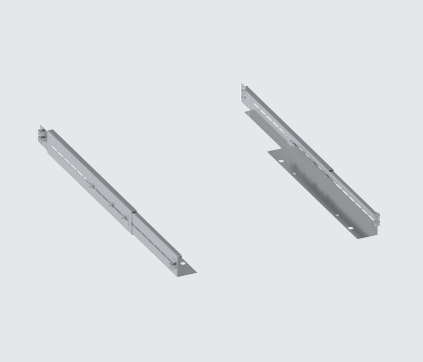

- For 19' racks regardless of tu distance between tu 19' levels
- Depth-adjustable: 475 - 800 mm
- Can be used from enclosure depth 800 mm
- Scope of delivery: 1 pair

Material: sheet metal
Surface: galvanised
Load capacity: 50 kg
Packaging unit: 1 pair

Order no.
316-544-20

Grid channel

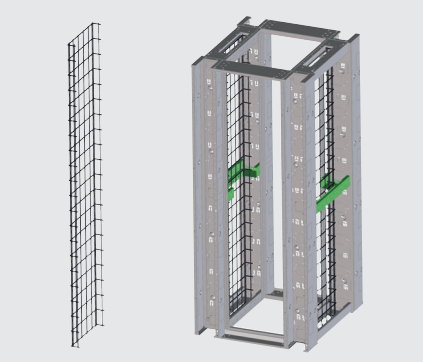

- Used for structured and flexible cable routing in tu rack
- Mounted laterally in tu base system over tu entire enclosure hight
- H = 2100 mm

Material:
Metal, galvanised
Dimensions (H x B x T):
2100 x (200 / 300 / 400) x 60 mm

Description	Order no.
B = 200 mm	640-037-61
B = 300 mm	640-037-63
B = 400 mm	640-037-64
Mounting set	640-037-80

www.apra.de

Overlength tray

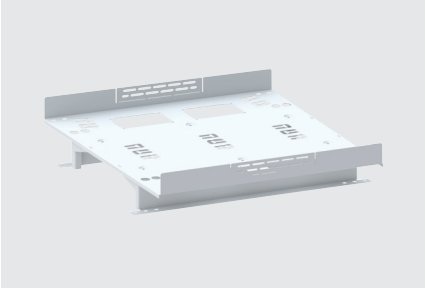

- is screwed onto tu enclosure system
- serves as a cable tray system for rows of enclosures and can replace suspended cable trays
- can be closed by fitting an end panel to tu front without tools

Material: sheet metal
Colour: RAL 7035 light grey
Dimensions (H x W x D):
250 x (600 / 800) x 580 mm

Width mm	Order no.
600	582-001-60
800	582-001-80

Cable bridge for excess length trough

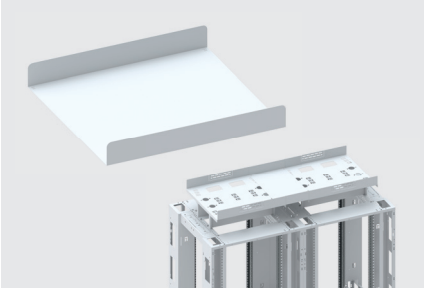

- For mounting between two overlength trays
- for bridging an air conditioning frame
- Easy-Fix mounting without screws

Material: sheet metall, plastic
Colour: RAL 7035 light grey, black
Dimensions (H x D):
80 x 580 mm

Order no.
582-001-30

Cable tray

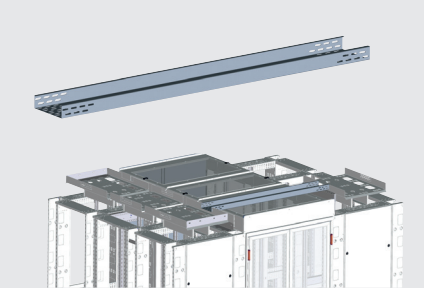

- for guiding cable goods above tu cold/hot aisle with aisle width of 1200 mm
- Can also be used in conjunction with corridor cover (cold aisle)

Material: sheet metal, galvanised
Dimensions (W x H x L):
200 x 60 x 1600 mm

Order no.
583-000-91

Beam bridge, extendable

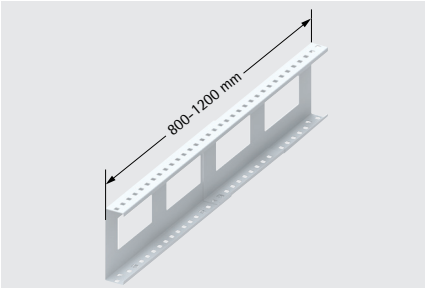

- For mounting on base and baying systems
- serves to accommodate mesh cable trays and tray systems

Material: sheet metal
Colour: RAL 7035 light grey
Dimensions (H x D):
175 x 800-1200 mm

Order no.
582-001-15

Cable finger set

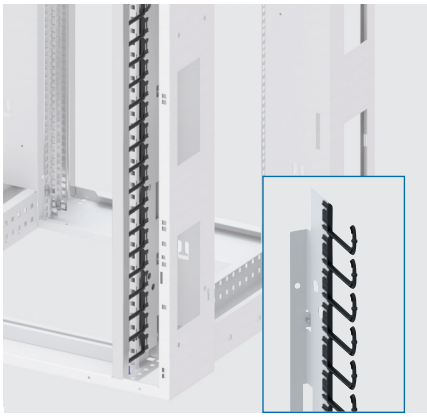

- Is mounted in tu cable duct of tu base system
- is used for cable retention per hight unit
- Set: 2 cable ducts over tu entire hight

Material: sheet metal, plastic
Colour: RAL 7035 light grey, black
Depth: 90 mm

U	Order no.
43	582-033-72
48	582-033-11

Mounting plate for cable duct

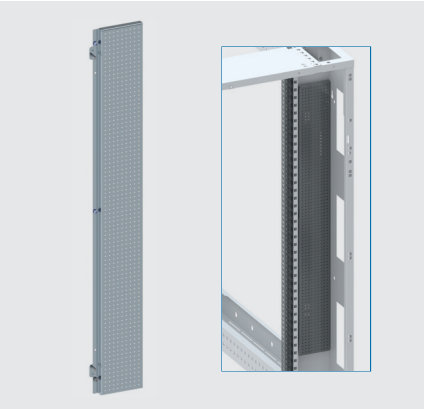

- for basic system
- for individual mounting of e.g. PDUs, radius limiters etc..
- Suitable for 43 U and 48 U
- PU: 2 mounting plates - 1 cable duct
- Mounting surface: 100 x 850 mm

Material: sheet metal, galvanised

Order no.
582-003-15

www.apra.de

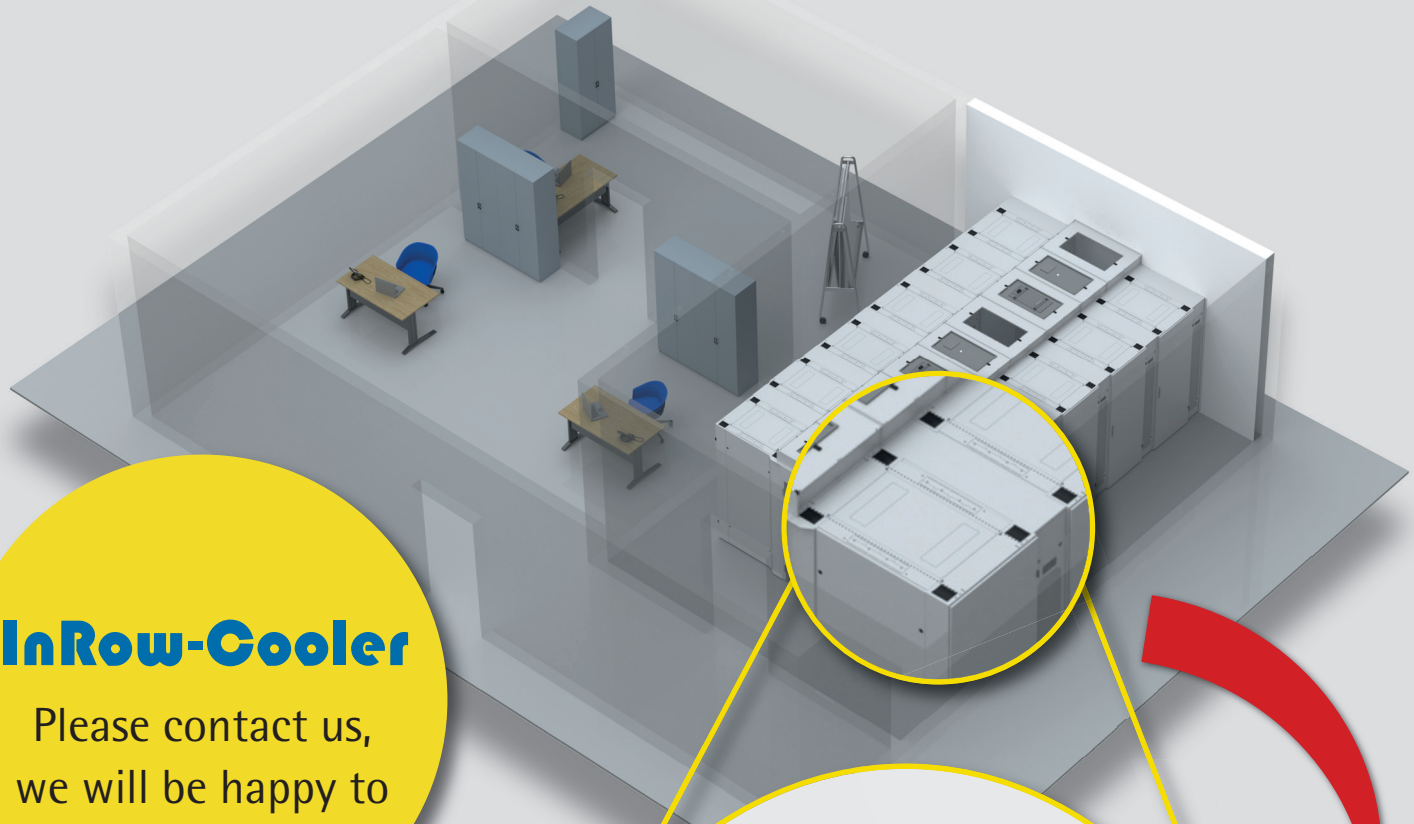

InRow-Cooler

Please contact us, we will be happy to advise you!

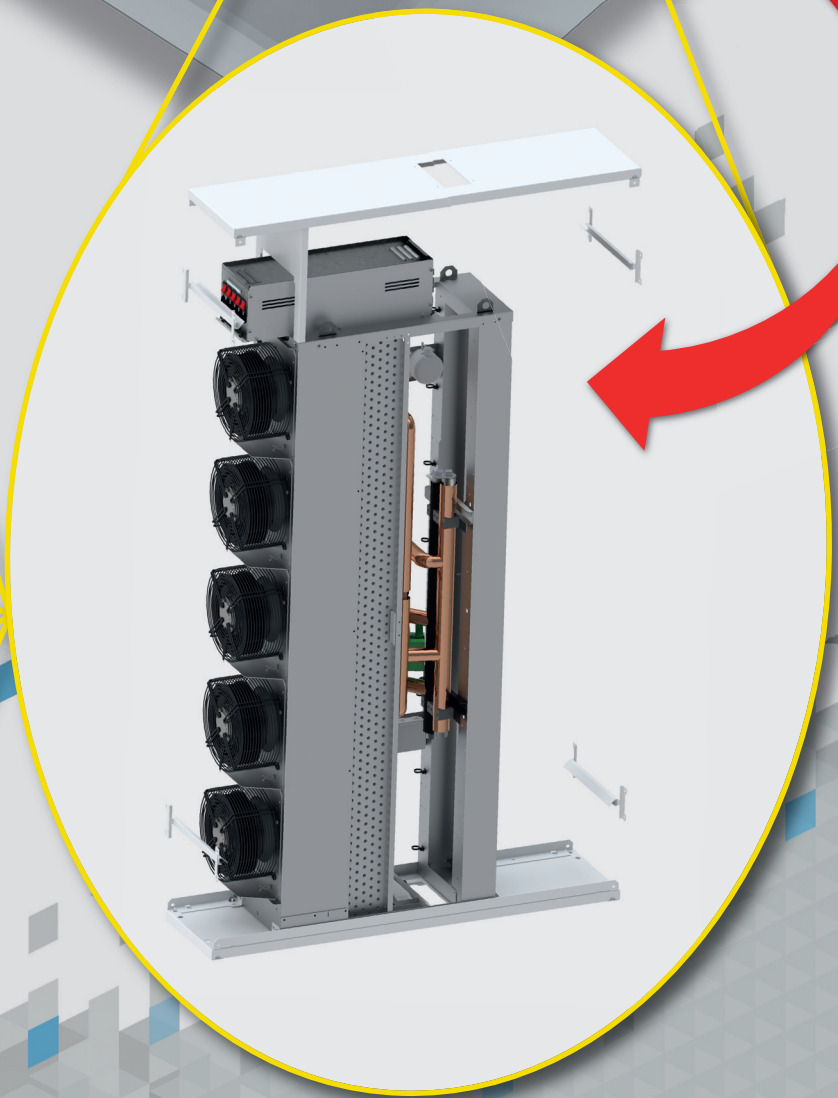

- CW / Cold water or refrigerant
- For integration into a row of cabinets
- Climate performance 8-30 kW
- Configurable for every application

www.apra.de

Mounting frame for InRow cooler

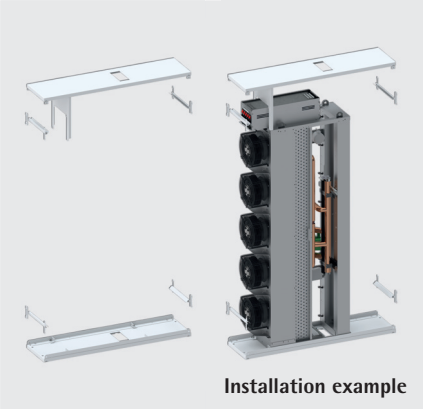

Installation example

Tu mounting frame consists of a top and bottom frame, which are screwed (top and bottom) between two base systems. Tuse are used to hold air-water uat exchangers, which are positioned between tu cabinet systems to efficiently ventilate tu cold aisles.

Mounting frames consisting of:
- Top and bottom frames
- Bulkuad angle set incl. brusus
- Closing angle
- Seal set

Material: sheet metal
Colour: RAL 7035 light grey

Hight mm	Depth mm	Order no.
1980	800	582-308-10
1980	1000	582-310-10
1980	1200	582-312-10
2200	800	582-308-12
2200	1000	582-310-12
2200	1200	582-312-12

Door closed

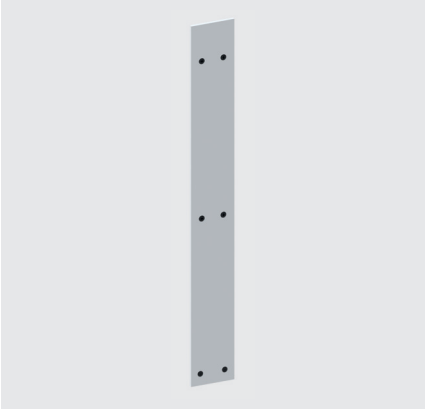

- with 4 screw locks (operation "double bit 5 mm")

Material: sheet metal
Colour: RAL 7035 light grey

Hight mm	Order no.
1980	582-320-02
2200	582-322-02

Door perforated



- with 4 screw locks (operation "double bit 5 mm")
- prepared for mounting a display

Material: sheet metal
Colour: RAL 7035 light grey

Hight mm	Order no.
1980	582-320-16
2200	582-322-16

Swing door system

- For closing off a NETcell cold/hot aisle enclosure
- Can be opened in both directions
- 180° opening angle, optimal access
- Ensures pressure equalization in the cold aisle (e.g., when the extinguishing system is triggered)
- High energy efficiency, as the cold aisle is always closed automatically
- Protection of persons in dangerous situations (escape door)
- Mounting frame made of sheet metal, door profiles made of aluminum, ESG panes
- For floor covering H=166 mm

Material: sheet metal
Colour: RAL 7037 dust gray



Hight mm	Floor width mm	U	Order no.
1980	1000	43	582-034-03
1980	1200	43	582-034-04
2200	1000	48	582-034-01
2200	1200	48	582-034-02

Sliding door system

- For closing off a NETcell cold/hot aisle enclosure
- Height adjustment to the floor possible
- for floor covering H=166 mm

Material: sheet metal
Colour: RAL 7035 lightgrey,
RAL 7037 dust gray

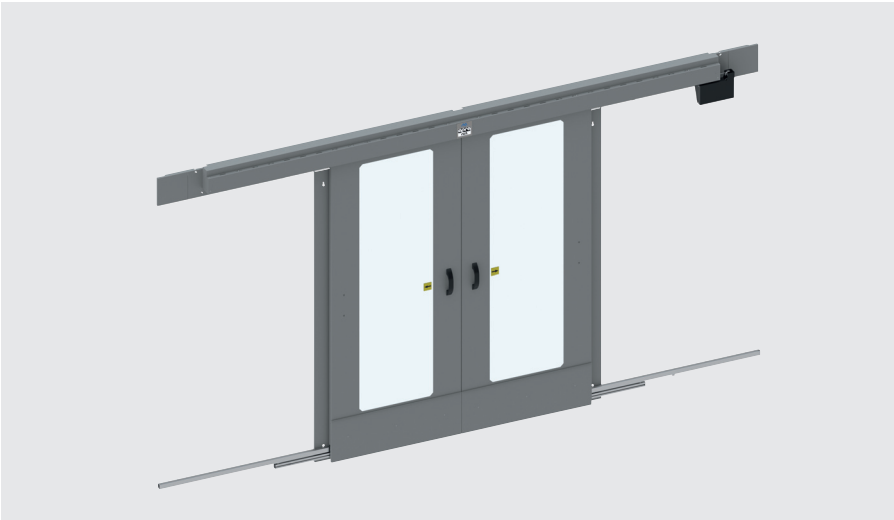

Hight mm	Floor width mm	Drive	U	Order no.
1980	1000	manual	43	582-020-10
1980	1200	manual	43	582-020-12
1980	1000	electric	43	582-120-10
1980	1200	electric	43	582-120-12
2200	1000	manual	48	582-022-10
2200	1200	manual	48	582-022-12
2200	1000	electric	48	582-122-10
2200	1200	electric	48	582-122-12

www.apra.de

Extension kit Synchronous operation with linear return

- Synchronous opening of both door wings with independent closing
- Mechaniscus return system
- High energy efficiency, as the cold/hot aisle is always closed automatically
- For extending the manual sliding door system

Order no.
583-008-62

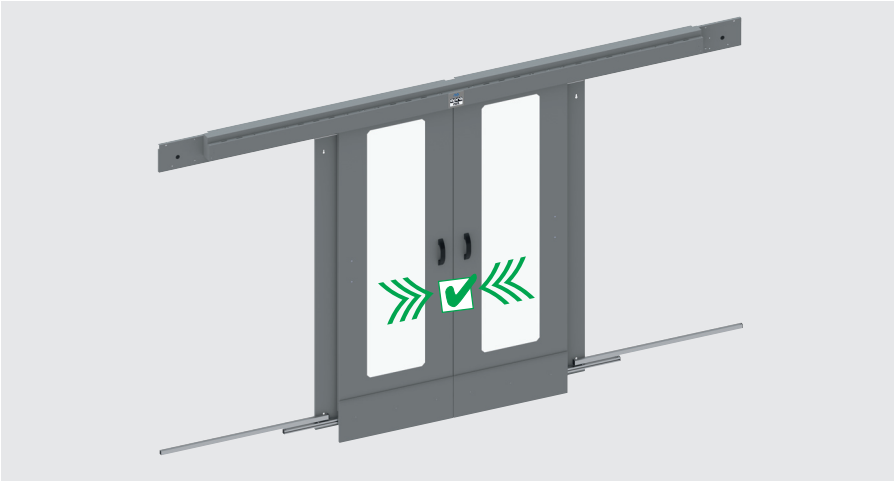

Rear wall

- For closing off a NETcell cold/hot aisle
- Horizontally divided installation
- Set = 2 rear wall panels, including mounting brackets and floor covering closureg
- For floor covering H=166 mm

Material: sheet metal
Colour: RL 7035 lightgrey

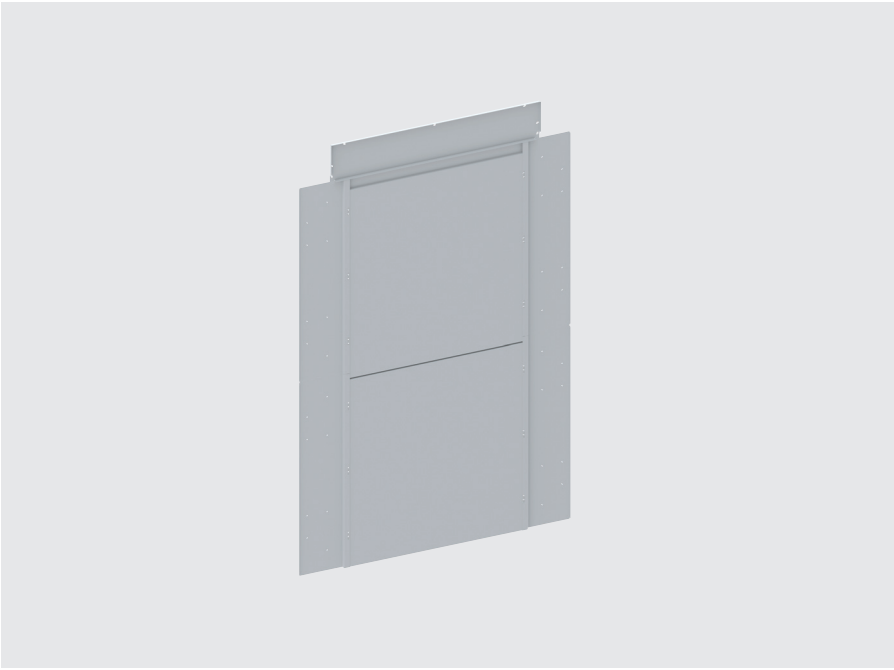

Hight mm	Floor width mm	U	Order no.
1980	1000	43	583-007-71
1980	1200	43	583-007-69
2200	1000	48	582-030-99
2200	1200	48	582-031-08

Floor covering with PC-Scuibe

- Easy installation on cabinet systems
- mit PC-Scuibe
- Scuibe von innen werkzeuglos abnehmbar

Material: sheet metal
Colour: RAL 7035 lightgrey
Hight: 166 mm

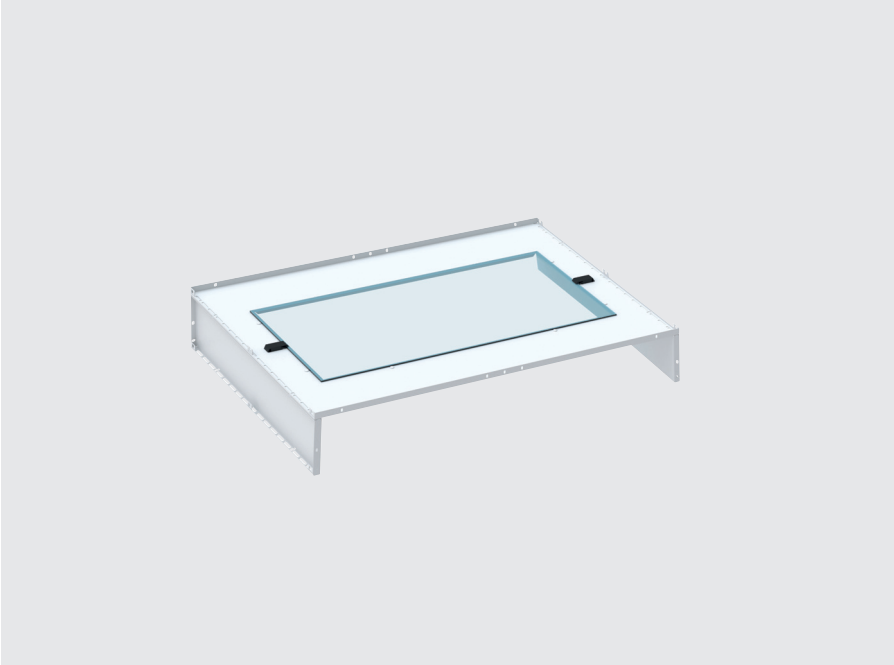

Floor width mm	Width mm	Order no.
1000	600	582-034-31
1200	600	582-034-37
1000	800	582-034-11
1200	800	582-034-17

Floor covering with LED panel

- Easy installation on cabinet systems
- for optimal illumination of the cold aisle
- LED-Panel with 20 W, 6000 K, 2400 lm
- Floor covering made of sheet metal, LED panel made of aluminum/acrylic
- Plug & Play-connection

Material: sheet metal
Colour: RAL 7035 lightgrey
Hight: 166 mm



Floor width mm	Width mm	Order no.
1000	600	582-034-32
1200	600	582-034-38
1000	800	582-034-12
1200	800	582-034-18

Subject to technical changes and errors. Illustrations may differ from the product.

www.apra.de

Floor cover with motion detector

- Easy installation on cabinet systems
- With motion detector
- Detection angle: 360°
- Detection range: Ø 5 m
- With central connection box

Material: sheet metal
Colour: RAL 7035 lightgrey
Hight: 166 mm



Floor width mm	Width mm	Order no.
1000	600	582-034-33
1200	600	582-034-39
1000	800	582-034-13
1200	800	582-034-19

19" plastic blanking plate, 1 U

- Air barrier function: a cost-effective, highly effective way to reduce energy costs in the data center
- Visual enhancement of the rack by covering exposed 19" surfaces
- attractive design thanks to the rounded front surface of the cover
- short installation time: the blanking plate is simply clipped into the 19" grid without the need for tools
- can be removed and reinserted at any time without wear and without tools
- Protection against dust ingress
- Fire protection class according to UL94 V-0
- Weight savings compared to traditio-nal metal bezels

Material:
Lexan 920, Fire classification according to UL94 V-0, ROHS-Konform
Surface:
RAL 7016 anthracite grey, RAL 7035 lightgrey oder RAL 9005 deep black
Delivery:
Set = 10 pieces / Set = 136 pieces



Colour	Delivery	Order no.
RAL 7016	Set = 10 pieces	213-156-25
RAL 7016	Set = 136 pieces	213-156-40
RAL 7035	Set = 10 pieces	213-156-30
RAL 7035	Set = 136 pieces	213-156-45
RAL 9005	Set = 10 pieces	213-156-78
RAL 9005	Set = 136 pieces	213-156-79



For your notes

www.apra.de

Important notes:

Questions for the sales team:

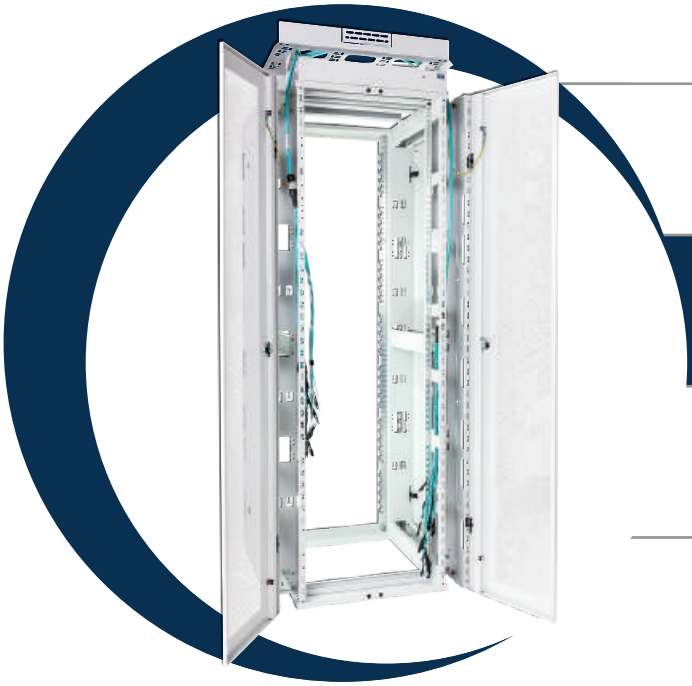

19" TiRAX cabinet system from page 11

19" NETcell cabinet system from page 65

Open 19" racks from page 83

19" floor-standing / wall-mounted enclosure VARi IT from page 97

Wall-mounting enclosure systems from page 111


Air conditioning technology from page 129


Power distribution system from page 137


Cabinet monitoring from page 155


Cable management from page 163


Distribution technology from page 169


General accessories / distribution technology from page 177

You can read more about products from the apra-group at www.apra-norm.com

Open distribution rack easyVARI

- can be completely dismounted
- easy transport to installation site
- simple assembly and installation of passive and active network components without interfering with cabinet mounts
- easy ventilation and installation, since no trim parts interfere
- 10 metal clamps are attached to every rack for cable entry (included in delivery). Cross-connection between individual racks is realised through the base
- 19" frame, variable depth 450-900 mm in 50 mm jumps

Material:
sheet metal
Finish:
RAL 7035 light grey
Delivery:
unmounted

Components

Item	Description
1	19" frame 21 U
2	Base, H0100 mm
3a-c	19" shelves
4	Depth struts, variable depth
5	Cabinet connector set
6a-c	Slide rails (without fig.)
7	Cable clamps

Delivery

Basic rack		
Item	pc.	Description
1	2	19" frame 21 U
2	1	Anti-tip base H = 100 mm, D = 1100 mm, cable inputs/outputs back and side
7	10	Cable clamps 125 x 66 mm
Connector rack		
Item	pc.	Description
1	2	19" frame 21 U
2	1	Anti-tip base H = 100 mm, D = 1100 mm, cable inputs/outputs back and side
5	1	Cabinet connector set
7	10	Cable clamps 125 x 66 mm
Extension frame		
Item	pc.	Description
1	2	19" frame 21 U

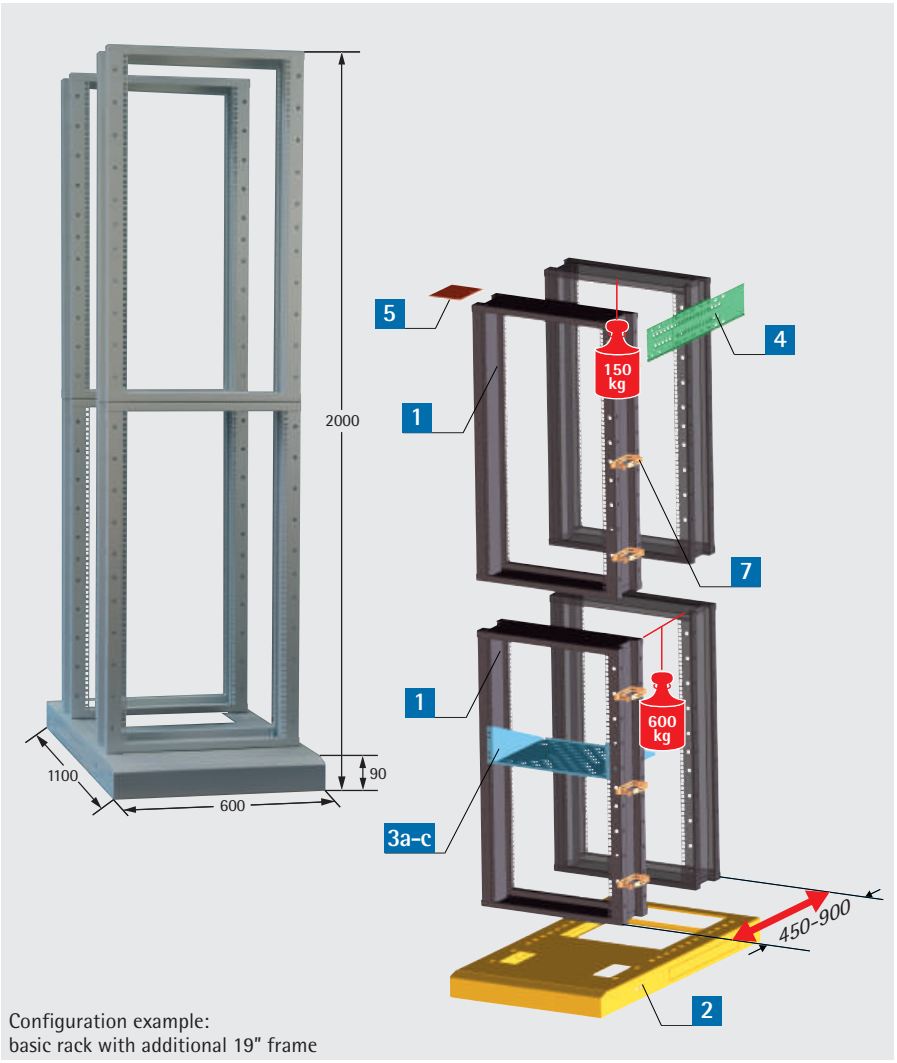

Configuration example:
basic rack with additional 19" frame

Description	Dimensions (H x W x D) mm	Order no.
Basic rack	2100 x 600 x 1100	582-101-00
Connector rack	2100 x 600 x 1100	582-101-10
Extension frame	1970 x 600 x 190	582-101-15

www.apra.de

3a 19" shelf 2 U, fixed installation

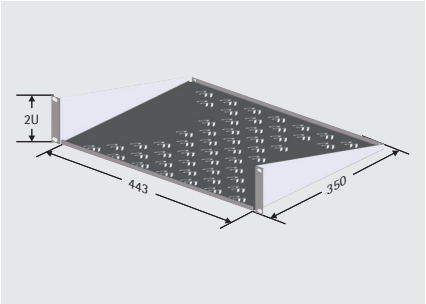

- simple assembly on a 19" grid (only one 19" level required)
- ventilated

Material:
sheet metal
Finish:
RAL 7035 light grey
Load capacity:
15 kg (distributed load/static)
Dimensions (H x W x D):
2 U (88 mm) x 19" (482,6 mm) x 350 mm
Floor space (w x d):
443 x 350 mm

Order no.
315-810-20

3b 19" shelf 1 U "VARIplain" fixed installation

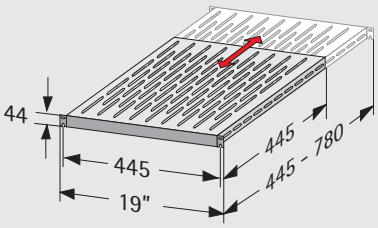

- depth variable due to VARIplain technology
- telescopic: 445 - 780 mm (see fig.)
- simple one-person assembly through open long hole in the 19" front (hook-in)

Material:
sheet metal
Finish:
RAL 7035 light grey
Load capacity:
150 kg (distributed load/static)
Dimensions (H x W x D):
1 U (44 mm) x 19" (482,6 mm) x 445 - 780 mm
Floor space (w x d):
445 mm x (445 - 780) mm
Delivery
mounting material included

Order no.
316-036-99

3c 19" shelf 1.5 U extractable

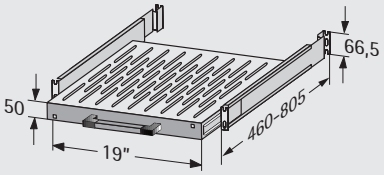

- variable-depth installation
- extraction length 500 mm
- simple one-person assembly

Material:
sheet metal
Finish:
RAL 7035 light grey
Load capacity:
60 kg (distributed load)
Dimensions (H x W x D):
1,5 U (66,5 mm) x 19" (482,6 mm) x 465 - 665 mm
Floor space (w x d):
410 x (465 - 665) mm

Depth D mm	Order no.
465	318-141-00
665	318-141-01

4 Depth struts, variable depth

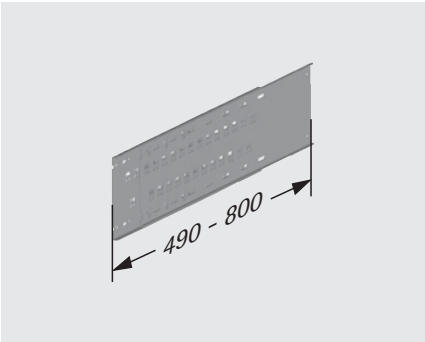

- to connect two 19" frames installed one behind the other

Order no.
582-101-32

5 Cabinet connector set

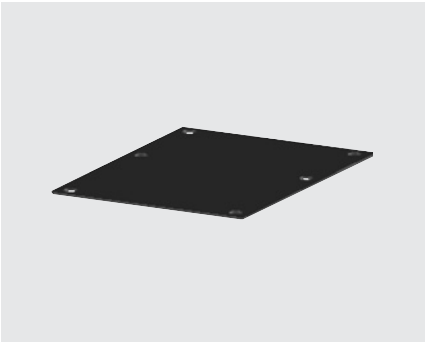

- for the lateral connection of other distribution racks

Order no.
582-101-34

6a Slide rail

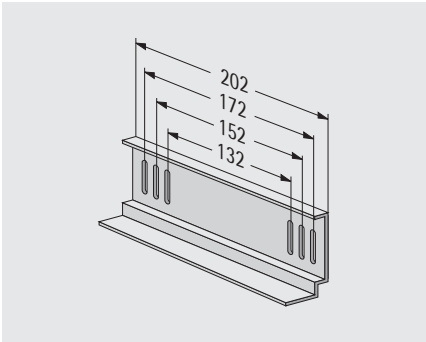

- for the installation on one 19" level
- Delivery: 1 pair

Load capacity:
50 kg

Order no.
312-543

6b Slide rail, hook-in/screwed on

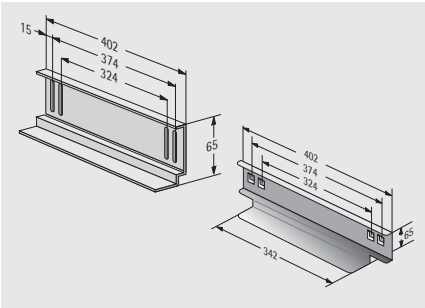

- to support heavy 19" plug-in units
- two 19" levels are required for mounting
- Delivery: 1 pair

Load capacity:
50 kg

Description	Order no.
hook-in	316-544-00
screwed on	312-544

6c Slide rail, variable depth

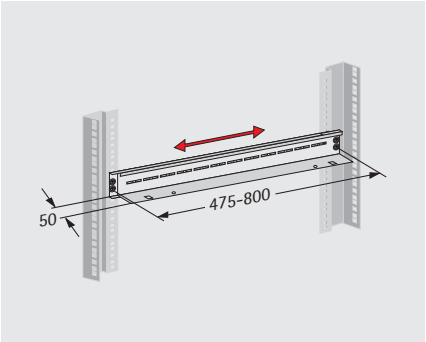

- for 19" plug-in units irrespective of the clearance to the 19" levels
- depth-adjustable
- for use as of a cabinet depth of 800 mm
- Delivery: 1 pair

Load capacity:
50 kg

Order no.
316-544-20

7 Cable clamp set

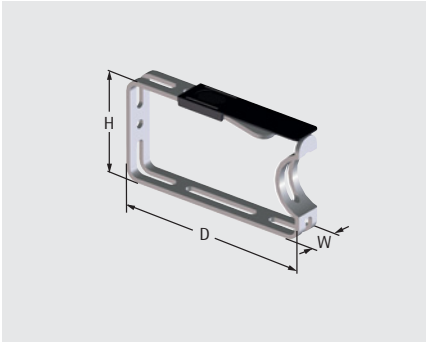

- for positioning cables vertically on the 19" frame
- set = 10 pieces

Material:
steel

Dimensions (H x W x D) mm	Order no.
66 x 23 x 125	640-036-12
88 x 23 x 125	640-036-13

www.apra.de

19" laboratory rack 21 U

- for frequent access to 19" equipment, for example in laboratories, and development departments

Material:
sheet metal / die cast
Finish:
RAL 7035 light grey
Pedestal: RAL 7037 dusty grey
Load capacity:
120 kg
Delivery:
unmounted

The following can be used as accessories: Shelves 2 U (page 85) and cable clamp set (page 86).

Delivery

Laboratory rack	
pc.	Description
1	19" sheet metal frame 21 U with grid in front and rear
2	Pedestal with integrated adjusting feet
1	Mounting material
Extension module	
pc.	Description
1	19" sheet steel frame 21 U with front and rear grid
1	Mounting material



Laboratory rack

Laboratory rack Extension module

Dimensions (H x W x D) mm	Description	Order no.
1044 x 561 x 770	Laboratory rack 21 U	585-010-20
984 x 561 x 190	Extension module 21 U	585-010-22

Castor set for laboratory rack

- for installation on the pedestal set
- H = 100 mm
- two castors with brake

Load capacity:
225 kg



Order no.
582-101-30

www.apra.de

19" wall rack

The 19" wall rack represents a flexible, effective and cost-effective 19" alternative in the wall distribution sector.

The 19" level can be depth adjusted from 300 mm up to a maximum of 500 mm providing enough space for cable routing even for deep plug-in units.
A second 19" level at the rear of the rack allows the assembly of sliding rails to accept heavy plug-in units. The cable feed above and below is fitted with an integrated strain-relief strip.
The 19" wall rack is simple to mount since the fixing holes can be marked to the wall by using the mounted 19" rack and subsequently be drilled and screwed.

Construction:
The 19" wall rack comprises two wall brackets **(1)**, upper and lower extraction rails **(2)** and a front and/or rear 19" level **(3)**.

Finish:
Wall bracket: RAL 7035 light grey
Extraction rails / 19" level: galvanised
Load capacity:
19" level front: 60 kg
19" level front and rear: 100 kg
Delivery:
unmounted

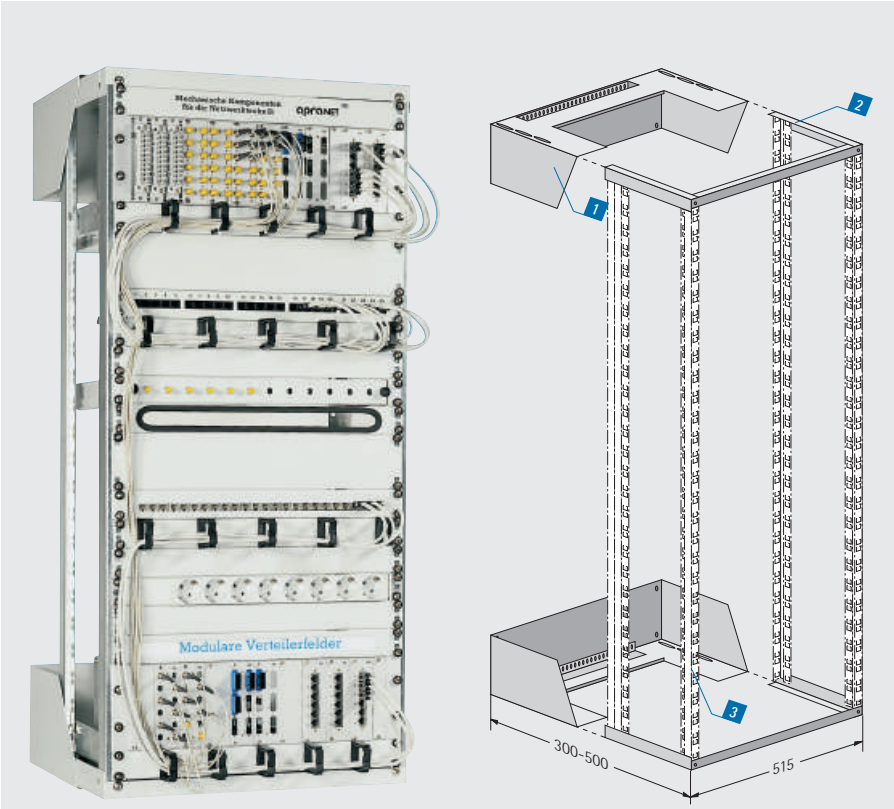

Sample configuration

A maximum of 4 vertical mountings can be integrated into the open wall rack. 19" vertical mountings **(3)** please order separately based on your U re-quirements (see page 89).

Delivery

Item	pc.	Description
1	2	Wall bracket
2	2	Extraction rails

Order no.
582-010-00

www.apra.de

3 19" vertical mountings

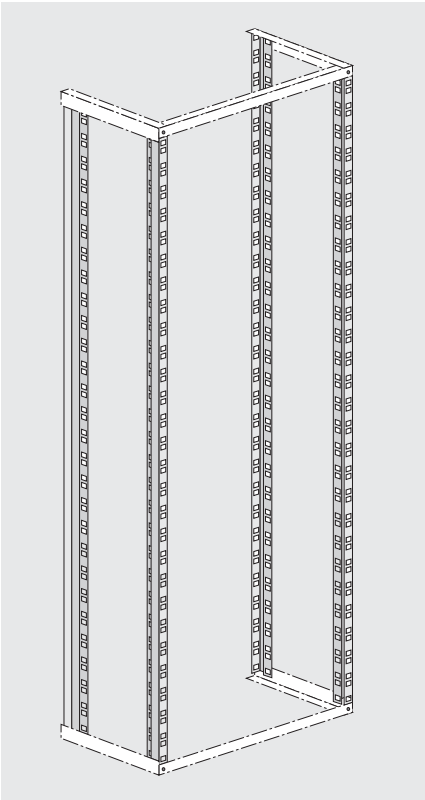

Finish:
galvanised

A maximum of 4 vertical mountings can be incorporated into the open wall rack.

U	Order no.
9	500-309
12	500-312
15	500-315
18	500-318
24	500-324

Slide rail for 19" vertical mounting

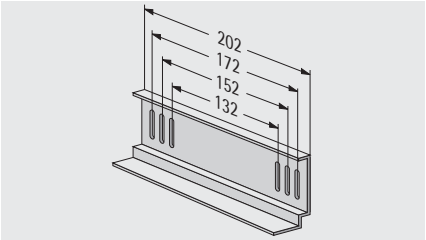

- to support heavy plug-in units
- includes mounting material

Material:
sheet metal
Finish:
galvanised
Delivery:
1 pair

Four 19" vertical mountings are required for mounting.

Order no.
312-543

19" cable entry panel 1 U / 2 U with metal clips



- for controlled and clearly arranged horizontal cable guiding at the 19" level
- including 4 cable hoops and lockings

Finish:
painted/chrome-plated
RAL 7035 light grey
RAL 9005 jet black
Dimensions (H x W x D):
1 U: 44 x 482,6 x 90 mm
2 U: 88 x 482,6 x 130 mm

U	Colour	Order no.
1	RAL 7035	213-145-41
1	RAL 9005	213-145-42
2	RAL 7035	213-145-43
2	RAL 9005	213-145-44

19" cable entry panel 1 U with plastic clips

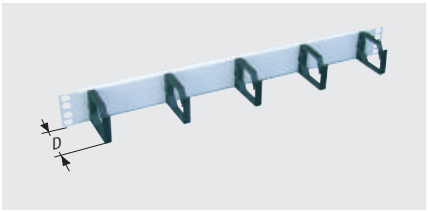

- for clear, neat horizontal cable entry in the 19" level
- including 5 cable clamps and mounting material

Finish:
RAL 7035 light grey
RAL 9005 jet black
Dimensions (H x W x D):
44 x 482,6 x 60 mm
Delivery:
mounting material included

Colour	Order no.
RAL 7035	213-145-00
RAL 9005	213-145-30

19" cable entry panel 1 U with Velcro fasteners

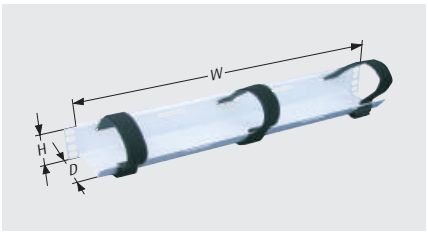

- for clear and neat horizontal cable entry at the 19" level with Velcro fastener
- including 3 Velcro strips and mounting material

Finish:
RAL 7035 light grey
RAL 9005 jet black
Dimensions (H x W x D):
44 x 482,6 x 90 mm

Colour	Order no.
RAL 7035	213-161-00
RAL 9005	213-161-10

19" desk rack 4 U

- the small 19" frame is ideal for space-saving yet secure mounting of 19" components
- can be mounted both horizontally and vertically
- with two extra drill holes in the bottom panel, it can also be mounted under a desktop or as simple wall rack
- includes raised floor shelf to accommodate excess cable lengths
- fast time-saving assembly
- cost-saving solution for small networks
- designed as simple assembly stands for 19" components in laboratories or test rooms

Material:
sheet metal
Finish:
RAL 7035 light grey
Dimensions (H x W x D):
190 x 502 x 250 mm
Delivery:
unmounted

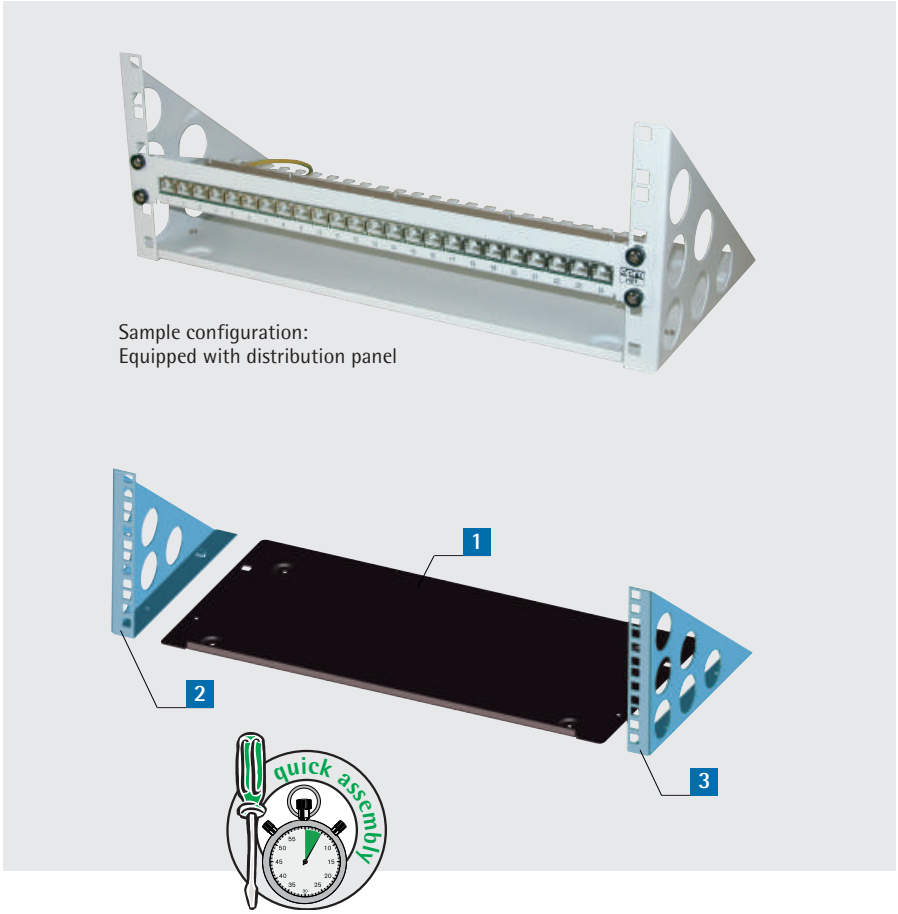

Delivery

Item	pc.	Description
1	1	Basic plate
2	1	Side part left
3	1	Side part right
	16	Screws M 5 x 12
	16	Decorative washers M5
	16	with collar Cage nuts M5-8
	1	Mounting material

Order no.
582-004-00

www.apra.de

1 19" / 21" rack system "NETcell 800"

- open 19 "/ 21" cabinet system with large volume integrated cable ducts across the entire rack height, as well as in the depth of the system.
- The vertical 19 "spars (42 U) can be adjusted to the ETSI (21") track by 90 °, if required, by simply repositioning them.
- With further options for cable routing "on top" via optional cable guide brackets (item 6) as well as an excess length tray (item 5) / integrated cable tray expandable.
- The cabinet system can be used as a closed rack using trim components (items 2, 3 and 4).
- Installation as a single cabinet and cabinet row possible.
- Cabinet system completely dismantled.

Installation hight:
19" = 48 U / 21" = 86 U
Material:
sheet metal
Finish:
RAL 7035 light grey
Load capacity:
1500 kg (distributed load)





Sample configuration

Table of components

Item	Description
1	Basic system
2	Door divided, perforated
3	Side wall / bulkhead
4	Roof plate
5	Oversize tub
6	Cable management angle / final panel
7	Adjustable feet

Dimensions (H x W x D) mm	Order no.
2200 x 800 x 600	582-030-80
2200 x 800 x 800	582-030-60
2200 x 800 x 1000	582-030-30
2200 x 800 x 1200	582-030-35

2 Door divided, perforated

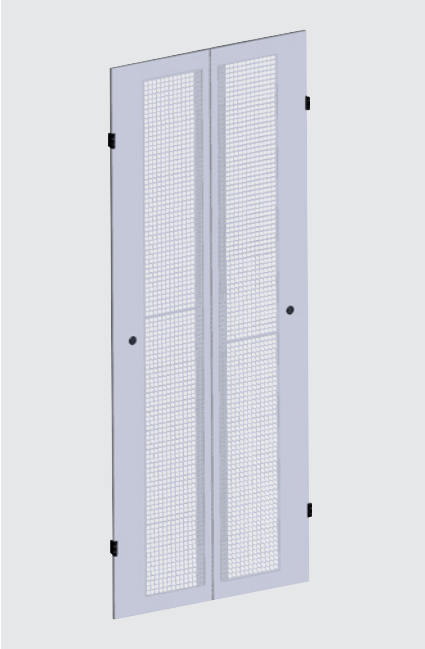

The door is divided and 82% perforated. This is for passive ventilation of the NETcell system. The doors can each be closed individually via cam locks. The two doors cover the entire cabinet front including the channels.

- including two cam locks with double bit closure
- Profile closure possible (see right)

Material:
sheet metal
Finish:
RAL 7035 light grey
Dimensions (H x W x D):
2000 x 800 x 35 mm

Order no.
582-030-47

3 Side wall / bulkhead



The side walls are provided with four cam locks. This is for easy and quick installation of the side walls.

- including four sash closures with double-bit closure
- Profile closure possible (see closure system)

Material:
sheet metal
Finish:
RAL 7035 light grey

Dimension (H x W) mm	Order no.
2200 x 600	582-030-41
2200 x 800	582-030-58
2200 x 1000	582-030-38
2200 x 1200	582-030-40

Locking systems for doors and side panel

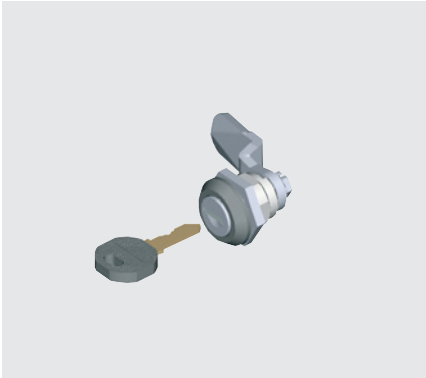

- **sash fastener** with EK 333 closing for locking the shared door (Item 2) and the side panel (Item 3)

Description	Order no.
Sash fastener	676-181
Spare key EK 333	676-200

www.apra.de

4 Roof

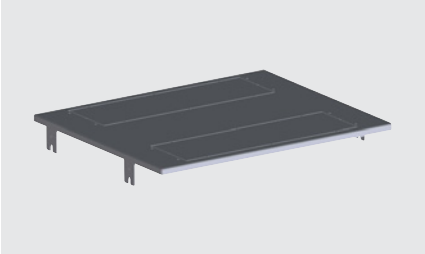

- The roof contains two pre-stamped plates that can be broken out for cable entry.

Material:
sheet metal
Finish:
RAL 7035 light grey

Depth D mm	Order no.
600	583-906-25
1200	583-905-16

Brush set

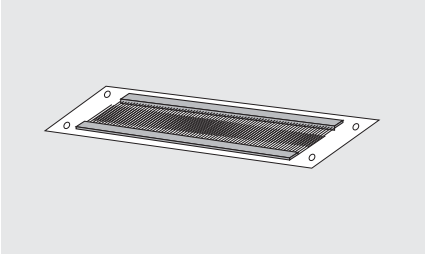

- After removing the pre-stamped panels of the roof panel, this brush set is used to close the openings or for cable entry through the roof.

Order no.
316-111-10

5 Oversize tub

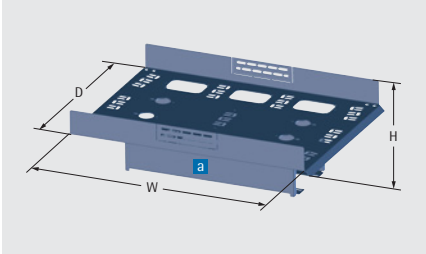

- is screwed onto the cabinet system
- serves as a cable tray system for cabinet rows and can replace hinged cable trays
- can be closed by the tool-free installation of a cover on the front side

Material:
sheet metal
Finish:
RAL 7035 light grey
Dimensions (H x W x D):
250 x 800 x 580 mm

Order no.
583-009-78

6 cable management bracket / cover

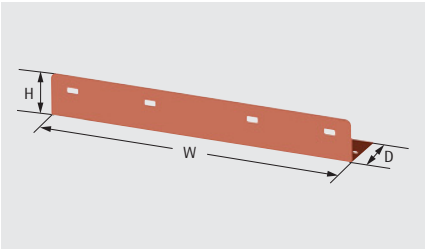

- serve for cable routing on the cabinet system
- are mounted on the roof without tools
- can be placed individually in the depth
- can also serve as the end panel of the excess length tub

Material:
sheet metal
Finish:
RAL 7035 light grey
Dimensions (H x W x D):
80 x 580 x 100 mm

Order no.
583-901-99

Adjusting feet



- are bolted to the frame
- serve to align the cabinet, e.g. on uneven ground
- 1 set = 4 pieces

Material:
sheet metal, plastic
Finish:
RAL 7035 light grey

Order no.
500-001-28

1 19"- / 21" Rack

The frame is an open 19 "/ 21" frame with side bar outcrops for optimal cable routing. With further options for cable routing "on top" via cable guide bracket (item 5). The special feature of the grid bars is that the mounting frame can be used as a 19 "(45 U) version or as a 21" (41 U) version, depending on the installation method.
Installation as a single cabinet and cabinet row possible. Rack system welded.

Material:
sheet metal
Finish:
RAL 7035 light grey
Load capacity:
600 kg (distributed load)
Dimensions (H x W x D):
2200 x 600 x 300 mm
Einbauhöhe:
19"= 45 U, 21"= 81 U

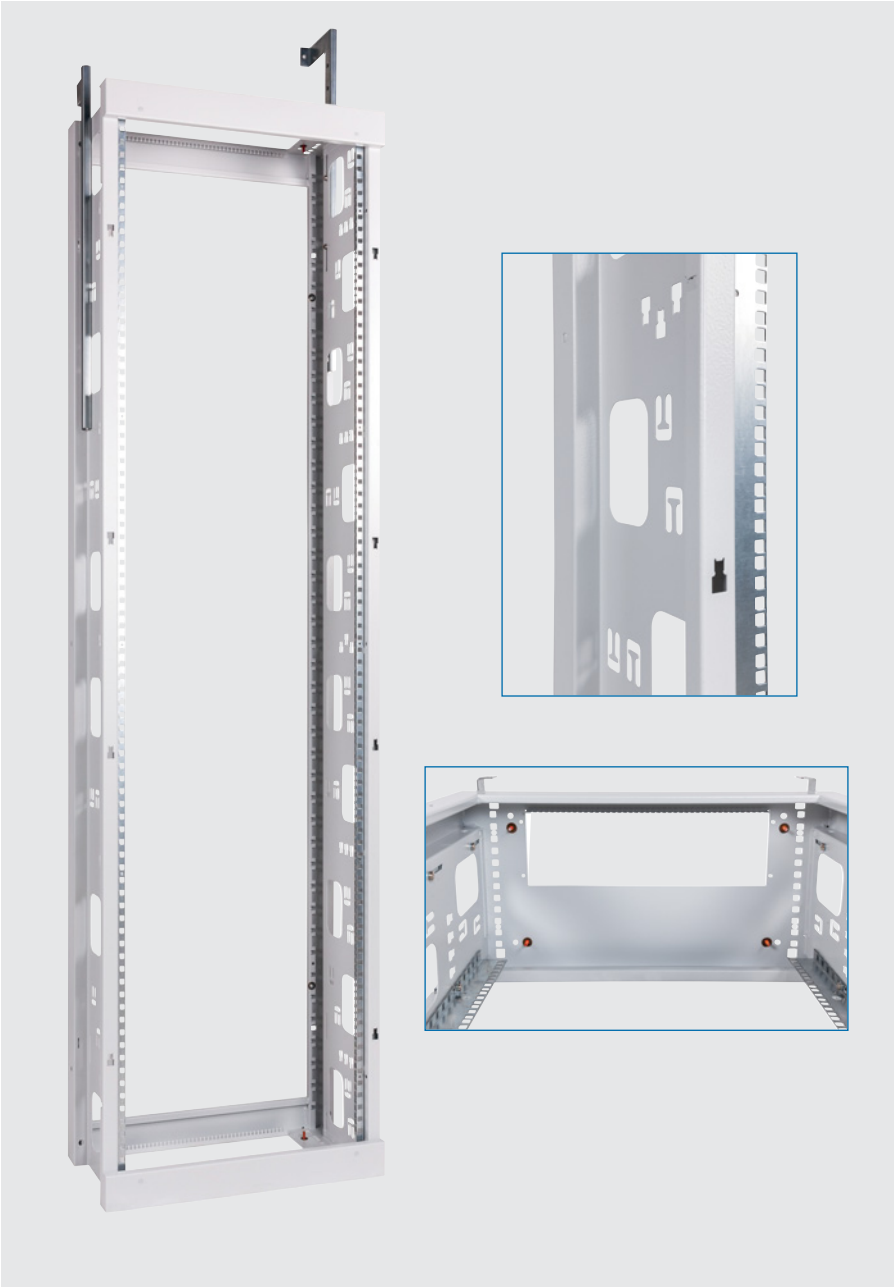

Table of components

Item	Description
1	ETSI rack
2	door, ventilated
3	side wall
4	rear panel
5	cable management bracket
6	cable channel

Order no.
582-030-00

www.apra.de

2 Door, ventilated

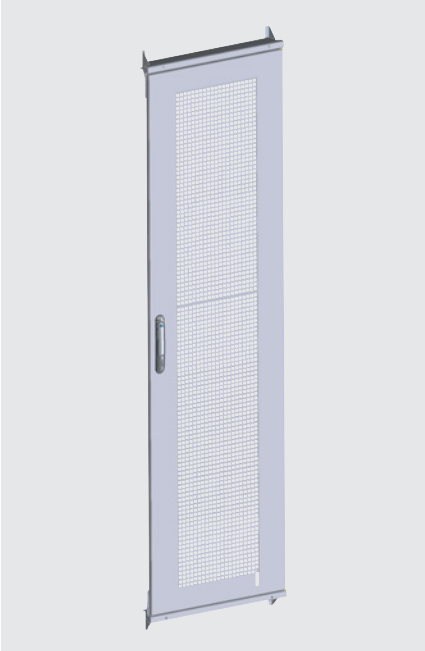

- 83% perforated for passive ventilation of the frame
- through the door, the entire cabinet front is covered
- Dimensions for H x W: 2200 x 600 mm
- the door can be closed with a two-point lock, profile half cylinder possible (see locking systems)

Material:
sheet metal
Finish:
RAL 7035 light grey

Order no.
582-030-24

3 Side wall

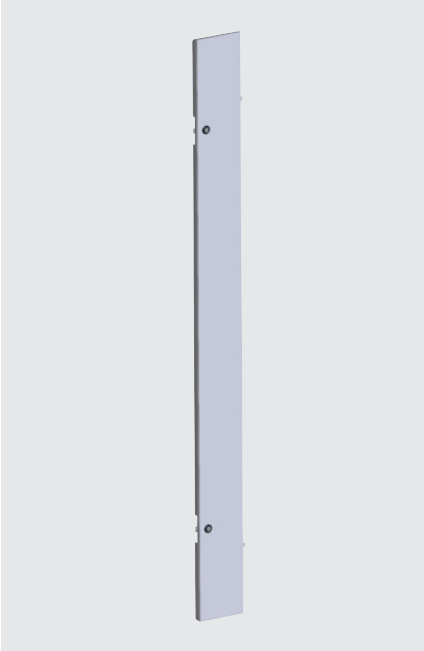

- equipped with two cam locks for easy and quick installation of the side walls
- Dimensions for H x W: 2200 x 300 mm
- Profile closure possible (see closure systems)

Material:
sheet metal
Finish:
RAL 7035 light grey

Order no.
582-030-28

4 Rear panel

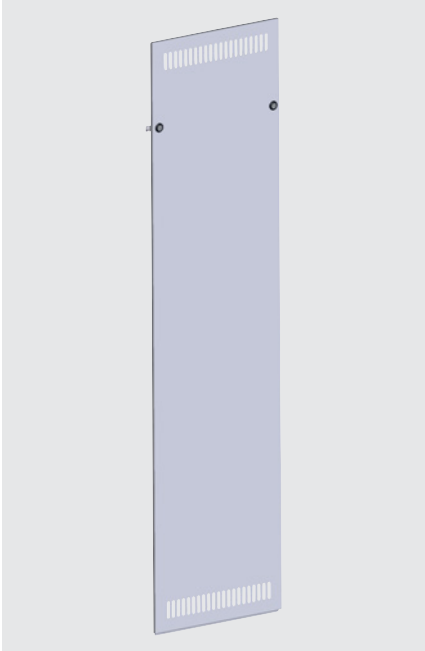

- equipped with two cam locks for easy and quick installation of the rear wall
- Dimensions for H x W: 2200 x 600 mm
- Profile closure possible (see closure systems)

Material:
sheet metal
Finish:
RAL 7035 light grey

Order no.
582-030-25

Locking systems for doors and side panel

- **profile semi-cylinder** L = 40 mm with EK 333 closing for turning lever lock on door Item 2
- **adapter** for installing a profile semi-cylinder with L = 40 mm acc. to DIN 18252 Item 2
- **sash fastener** with EK 333 closing for locking the side panel Item 4

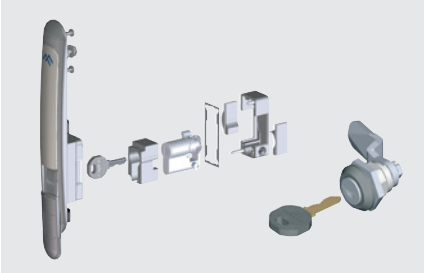

Description	Order no.
Profile half cylinder	676-316-00
Sash fastener	676-181
Adapter	676-316-10
Spare key EK 333	676-200

5 Cable management brackets

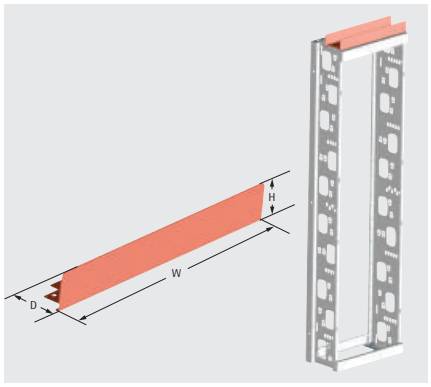

- for maneuvering cables on the rack

Material: sheet metal
Finish: RAL 7035 light grey
Dimensions (H x W x D):
80 x 570 x 100 mm

Order no.
582-030-22

6 Cable channel set

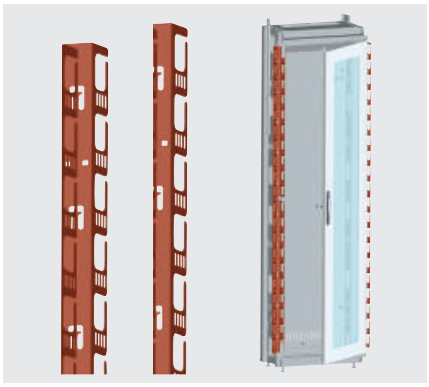

- for vertical cable routing in front of the 19 "/ 21" level
- is mounted on the frame
- Set = 2 pieces

Material: sheet metal
Finish: RAL 7035 light grey

Order no.
582-030-26

ETSI on 19 " adapter plate

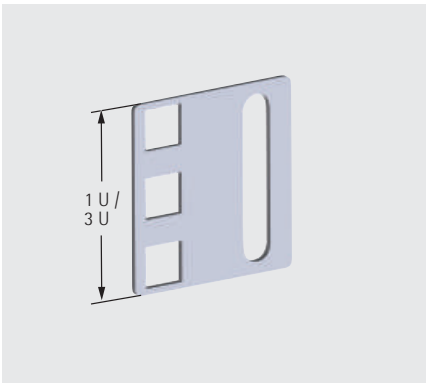

- Adapter bracket for mounting 19" components in a 21" mounting frame
- The adapter brackets are simply mounted in the 21 "plane using a screw and cage nut.
- Set = 5 pairs

Material: sheet metal
Finish: galvanised

Description	Order no.
1 U	213-900-93
3 U	213-900-94

LED cabinet light



- cost-optimised LED technology with a power consumption of 5 W (light intensity equivalent to a 75 W light bulb)
- internal power supply unit with wide range voltage 100 - 230 V / AC
- long-life and no maintenance (service life at 20 °C = 60,000 h)
- available with switch or motion detector
- magnetic attachment for individual mounting in the cabinet
- pressure clamp connection

Connections must be ordered separately!

Description	Order no.
LED cabinet light with switch	640-143-05
LED cabinet light with motion detector	640-143-06
Connection with Euro plug, L = 2.5 m	640-143-08

Document pocket



- self-adhesive
- heat-resistant up to 60 °C
- load capacity of up to 3 kg
- your company's logo can be affixed

Material:
plastic, black
Dimensions (H x W x D):
235 x 260 x 27 mm

Order no.
640-100

Potential equalization rail 19 "/ 21"

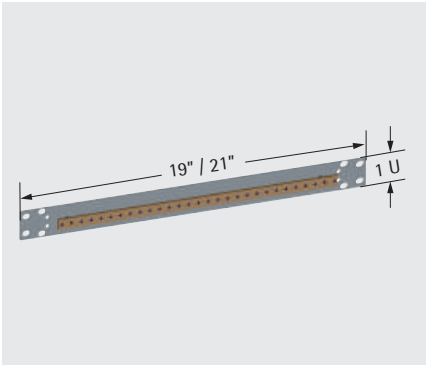

- can be installed in a 19 "and 21" plane
- Connection possibility: 27 x M 5
- Rail cross-section: 50 mm^2

Material:
sheet metal / copper
Finish:
galvanised
Dimensions (H x W x D):
44 x 535 x 19 mm

Order no.
582-030-27



19" TiRAX cabinet system from page 11

19" NETcell cabinet system from page 65

Open 19" racks from page 83

19" floor-standing / wall-mounted enclosure VARi IT from page 97

Wall-mounting enclosure systems from page 111

Air conditioning technology from page 129


Power distribution system from page 137


Cabinet monitoring from page 155


Cable management from page 163


Distribution technology from page 169


General accessories / distribution technology from page 177

You can read more about products from the apra-group at www.apra-norm.com

www.apra.de

VARi IT 501

The expert for industrial and office solutions

VARi IT is the flexible and visually appealing housing solution for your network applications. Removable cover parts ensure all-round accessibility and quick access to the installed 19" components. The unique option of mounting the front 19" level in combination with the use of a front cover in front of the basic housing ensures optimum handling. The extensive portfolio of accessories and the variety of different, individually configurable housing dimensions make the VARi IT the housing for your customer-specific requirements.

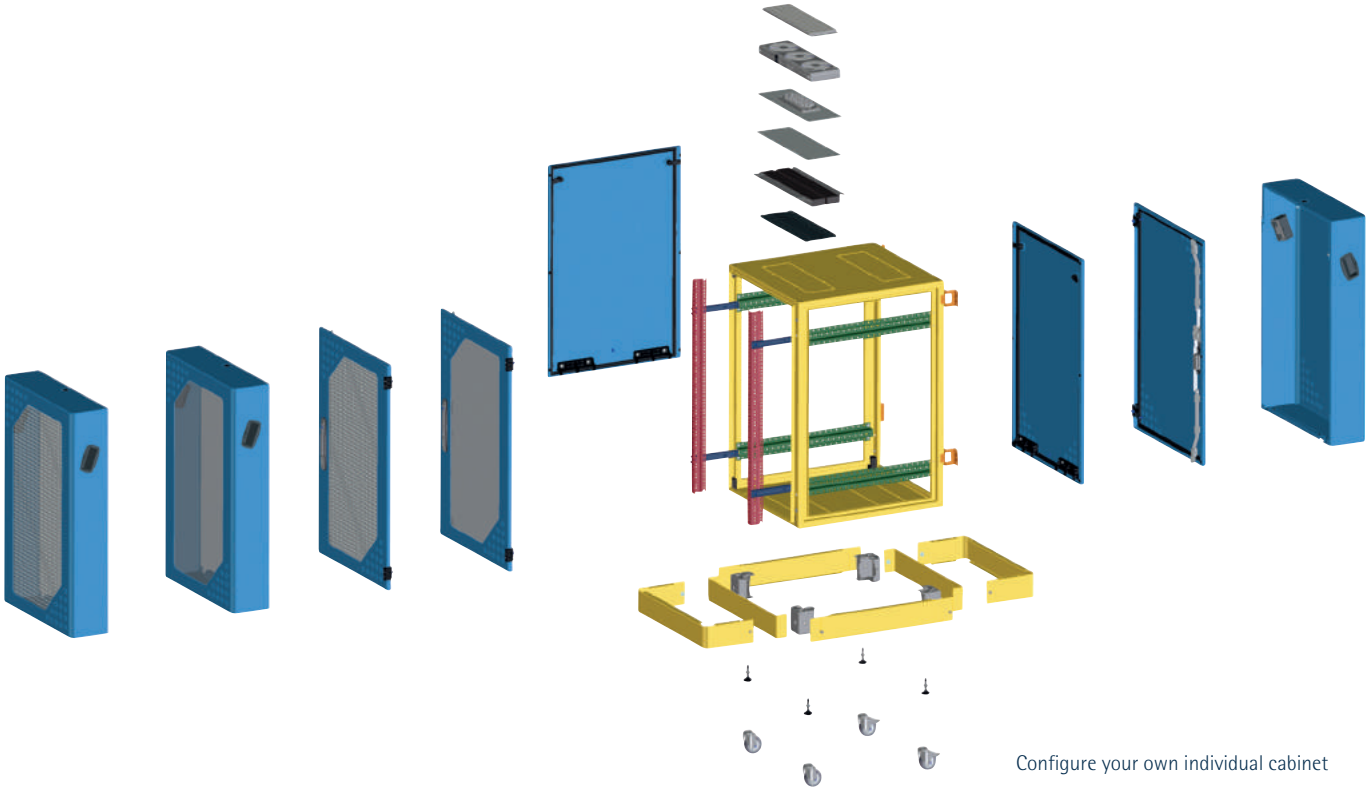

Configure your own individual cabinet

VARi IT Highlights

- developed for flexible Networking solutions in industrial and office applications
- available as floor-standing or wall-mounting rack
- fast and easy access due to dismountable frame covers
- solid frame construction (welded frame)
- 19" mounting level moved to front for better access (for version with covers)
- abaiable depths: D = 400 mm to D= 1000 mm
- pre-perforated cut-outs for easy cable entry in top & bottom
- possibility to mount fan-units in top & bottom
- door hingers interchangeable (upon request)
- doors with lever lock (profile semi cylinder optional)
- wide range of possivilities for configuration
- Protection to IP54

www.apra.de

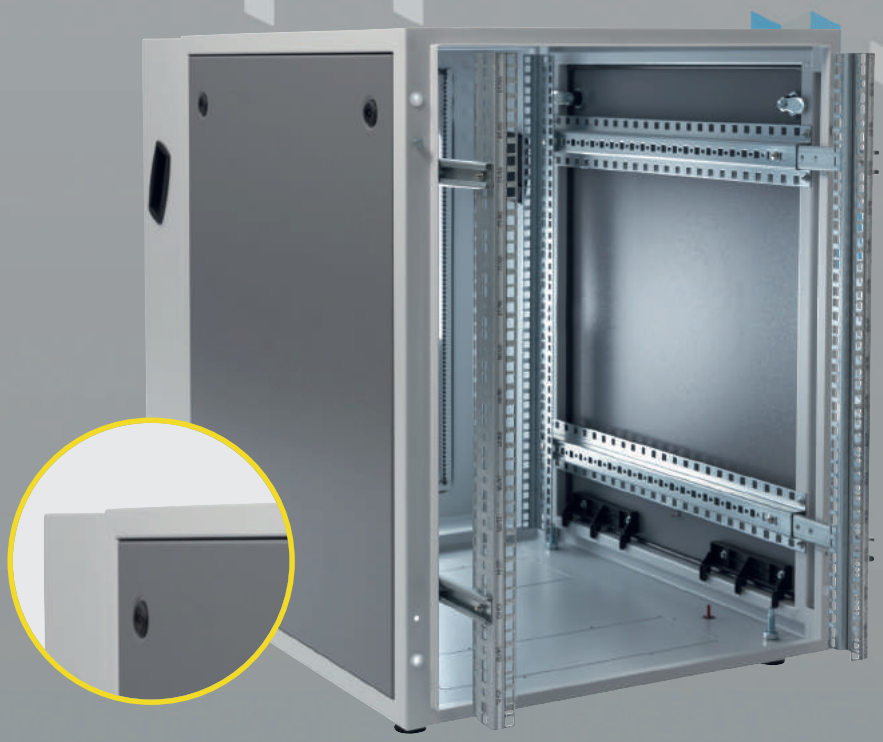

Two-color design



Usable as wall-mounted and free-standing distributor

VARi IT 501

accessible from all sides
high protection due to IP 54
flexible depth
of 400 - 1000

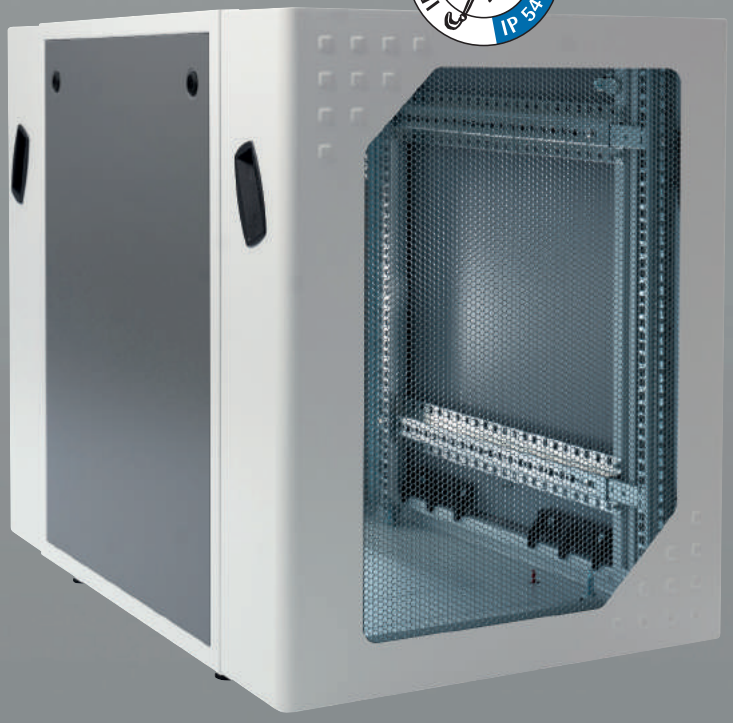

flexible depth
of 400 - 1000

Wall distributor housing "400"

- Load capacity = 150 kg
- Basic housing welded, D = 400 mm
- 19 "level 9 U - 19 U, front mounted
- Glazed door with swivel lever lock
- Side walls closed
- Back wall closed
- wall mounting kit
- Cable entry in the roof and floor area possible
- Brush set for cable entry in the roof sheet / breakouts
- equipotential bonding set
- 19 "screw set M 5 (50x)

Material:
sheet metal
Finish:
Basic housing: RAL 7035 light gray
Side panels: RAL 7037 dusty gray
Delivery:
fully assembled



Dimensions H x W x D mm	U	Order no.
530 x 600 x 400	9	501-409-02
750 x 600 x 400	15	501-415-02
950 x 600 x 400	19	501-419-02

Wall distributor housing "700"

- Load capacity = 150 kg
- Basic housing welded, D = 700 mm
- 2x 19 "level 9 U - 19 U, mounted at the back and front
- Glazed door with swivel lever lock
- Side walls closed
- Back wall closed
- wall mounting kit
- Cable entry in the roof and floor area possible
- Brush set for cable entry in the roof sheet / breakouts
- equipotential bonding set
- 19 "screw set M 5 (50x)

Material:
sheet metal
Finish:
Basic housing: RAL 7035 light gray
Side panels: RAL 7037 dusty gray
Delivery:
fully assembled



Dimensions H x W x D mm	U	Order no.
530 x 600 x 700	9	501-709-15
750 x 600 x 700	15	501-715-15
950 x 600 x 700	19	501-719-15

www.apra.de

Stand distributor "700"

- Load capacity = 500 kg
- Basic housing welded, D = 700 mm
- 2x 19 "level 9 U - 19 U, mounted at the back and front
- Glazed door with swivel lever lock
- Side walls closed
- Back wall closed
- adjusting foot set
- Cable entry in the roof and floor area possible
- Brush set for cable entry in the roof sheet / breakouts
- potential equalisation set
- 19 "screw set M 5 (50x)

Material:
sheet metal
Finish:
Basic housing: RAL 7035 light gray
Side panels: RAL 7037 dusty gray
Delivery:
fully assembled



Dimensions H x W x D mm	U	Order no.
530 x 600 x 700	9	501-709-02
750 x 600 x 700	15	501-715-02
950 x 600 x 700	19	501-719-02

Server cabinet "1000"

- Basic housing welded, D = 1000 mm
- 2x 19 "level 9 U - 19 U, rear and front mounted, adjustable
- perforated hood front and back (T = 150 mm) with cam lock
- Side walls closed
- Adjusting foot set
- Cable entry in the roof and floor area possible
- Brush set for cable entry in the roof sheet / breakouts
- equipotential bonding set
- 19 "screw set M 5 (50x)

Material:
sheet metal
Finish:
Basic housing: RAL 7035 light gray
Side panels: RAL 7037 dusty gray
Delivery:
fully assembled



Dimensions H x W x D mm	U	Order no.
530 x 600 x 1000	9	501-709-10
750 x 600 x 1000	15	501-715-10
950 x 600 x 1000	19	501-719-10

Configure your own individual cabinet.

Item	Description	Seite
1	Base enclosure	104
2	19" vertical mounting	104
3	Reducing traverse	104
4	Reducing traverse extension	104
5	Door with safety class	105
6	Door closed	105
7	Door, perforated (83 %)	105
8	Cover with safety glass	105
9	Cover, closed	105
10	Cover, perforated (83 %)	105
11	Side wall	106
12	Rear panel	106
13	Closing systems for doors	106
14	Base	106
15	Adjusting feet (pieces)	106
16	Castor set	107
17	Wall mounting set	107
18	Brush set for flange plate opening	107
19	Cable plate with rubber insert	107
20	Cable flange plate, solid (IP 54)	107
21	Cable flange plate, ventilated	107
22	Cover panel with multi gland plate (IP 54)	108
23	Ventilation unit	108
24	Filter set	109

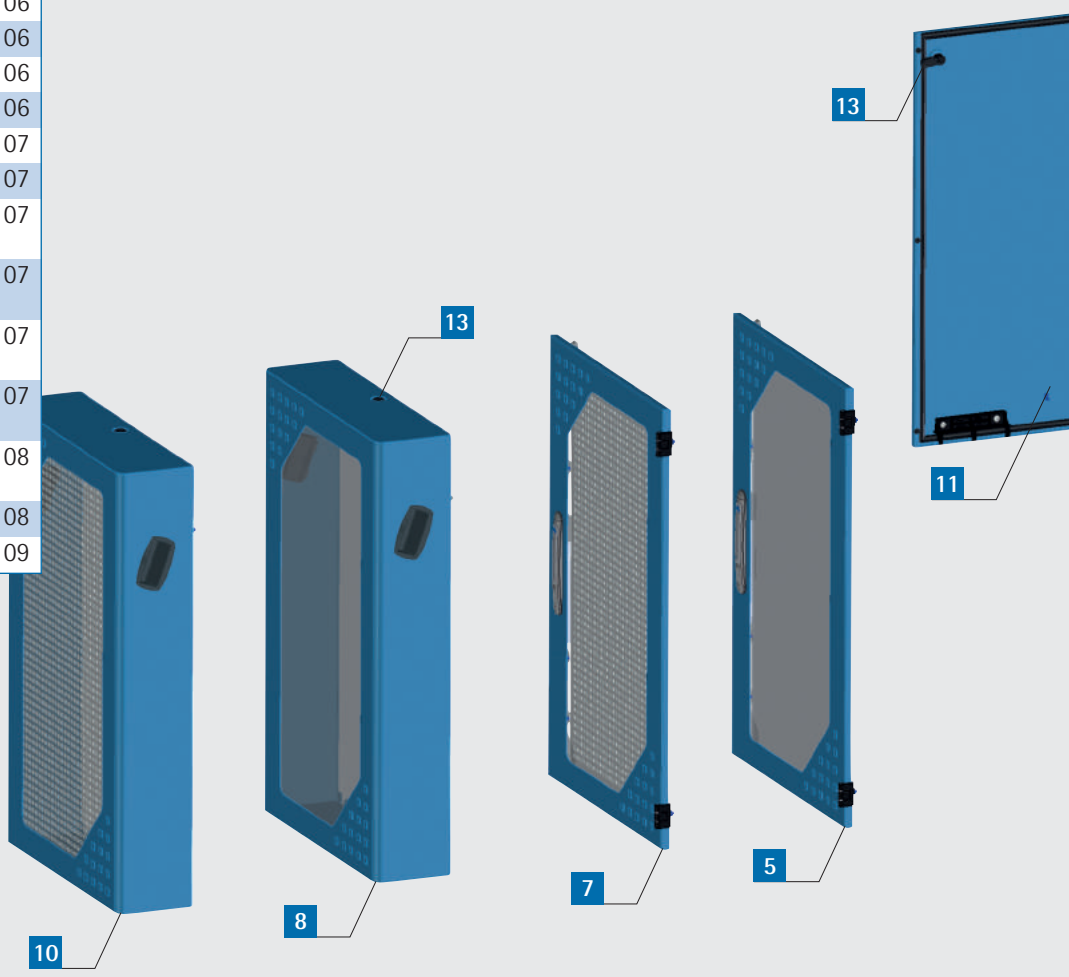

www.apra.de

Select step by step the cabinet components you need.

Technical information: max. 19" installation dimension

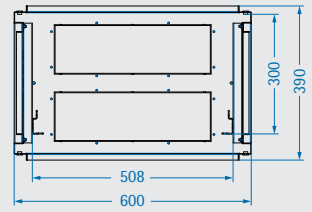

Top view cabinet rack
W x D = 600 x 400 mm

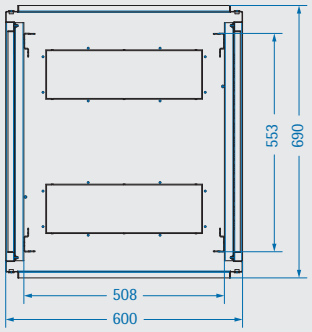

Top view cabinet rack
W x D = 600 x 700 mm

www.apra.de

1 Base enclosure

The solid base enclosure consists of a welded frame with pre-perforated cut-outs for cable entry and ventilation units in top & bottom. Four pre-installed reducing traverses for the installation of the 19" vertical mounting frames.

Material:
sheet metal
Finish:
RAL 7035 light grey
Delivery:
assembled

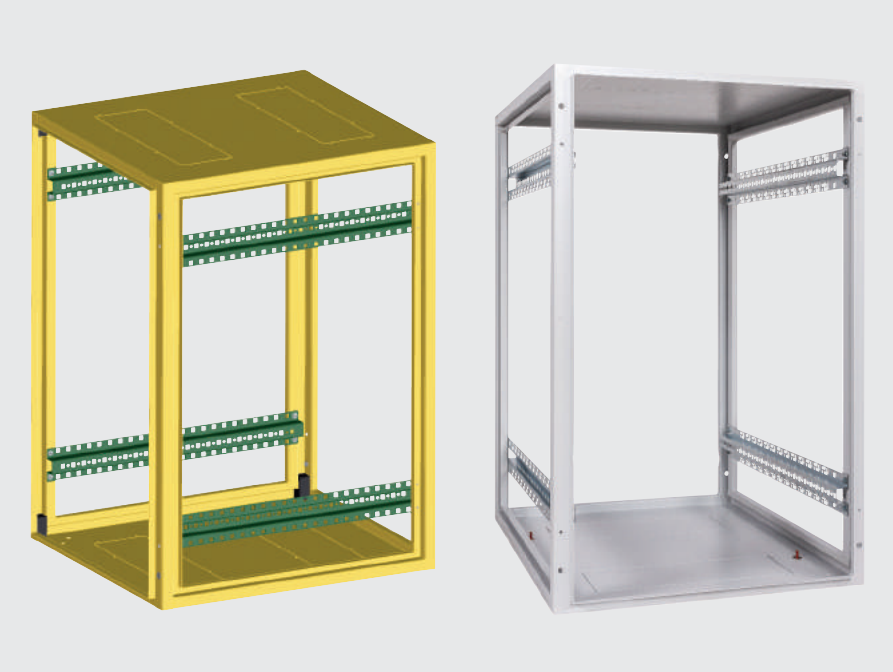

Dimensions (H x W x D) mm	U	Order no.
530 x 600 x 400	9	501-409-00
530 x 600 x 700	9	501-709-00
750 x 600 x 400	15	501-415-00
750 x 600 x 700	15	501-715-00
950 x 600 x 400	19	501-419-00
950 x 600 x 700	19	501-719-00

2 19" vertical mounting

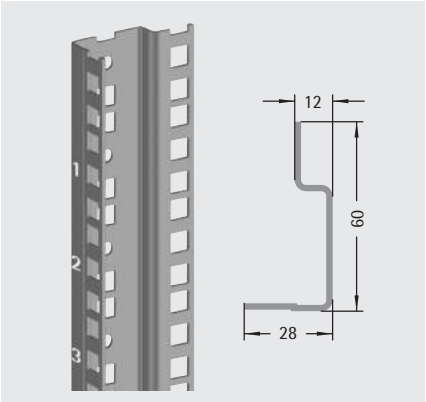

- ASA perforation
- printed U steps

Material: sheet metal
Finish: galvanised

U	Order no.
9	316-120-09
15	316-120-15
19	316-120-19

3 Reducing traverse

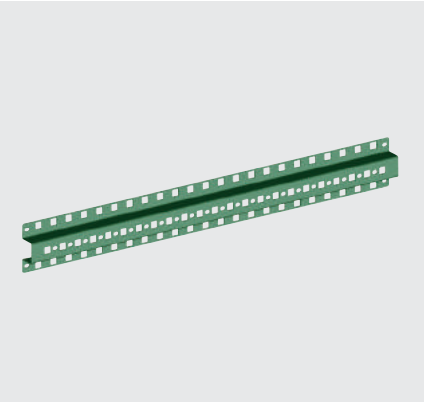

- for mounting on the base enclosure
- for variable depth installation of 19"vertical mountings

Material: sheet metal
Finish: galvanised

D mm	Order no.
400	501-002-20
700	501-002-25

4 Reducing traverse extension

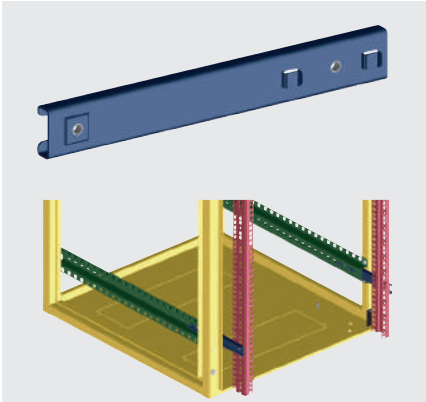

- for mounting on the reducing traverse
- for variable depth installation of 19"vertical mountings

Material: sheet metal
Finish: galvanised

Order no.
501-002-30

www.apra.de

5 Door with safety glass



- with lever lock
- optional with profile semi-cylinder (40 mm)

Material: sheet metal
Finish: RAL 7035 light grey

Dimensions (HxB) mm	U	Order no.
530 x 600	9	501-609-01
750 x 600	15	501-615-01
950 x 600	19	501-619-01

6 Door, closed



- with lever lock
- optional with profile semi-cylinder (40 mm)

Material: sheet metal
Finish: RAL 7035 light grey

Dimensions (HxB) mm	U	Order no.
530 x 600	9	501-609-02
750 x 600	15	501-615-02
950 x 600	19	501-619-02

7 Door, perforated (83%)



- with lever lock
- optional with profile semi-cylinder (40 mm)

Material: sheet metal
Finish: RAL 7035 light grey

Dimensions (HxB) mm	U	Order no.
530 x 600	9	501-609-16
750 x 600	15	501-615-16
950 x 600	19	501-619-16

8 Cover with safety glass



- with sash fastener on top (standard 5 mm double-bit)
- optional with profile lock

Material: Aluminium
Finish: RAL 7035 light grey

Dimensions (H x W x D) mm	U	Order no.
530 x 600 x 150	9	501-609-21
750 x 600 x 150	15	501-615-21
950 x 600 x 150	19	501-619-21

9 Cover, closed



- with sash fastener on top (standard 5 mm double-bit)
- optional with profile lock

Material: Aluminium
Finish: RAL 7035 light grey

Dimensions (H x W x D) mm	U	Order no.
530 x 600 x 150	9	501-609-22
750 x 600 x 150	15	501-615-22
950 x 600 x 150	19	501-619-22

10 Cover, perforated (83%)



- with sash fastener on top (standard 5 mm double-bit)
- optional with profile lock

Material: Aluminium
Finish: RAL 7035 light grey

Dimensions (H x W x D) mm	U	Order no.
530 x 600 x 150	9	501-609-26
750 x 600 x 150	15	501-615-26
950 x 600 x 150	19	501-619-26

11 Side wall



- with 2 sash fasteners (standard 5 mm double-bit)

Material:
sheet metal
Finish:
RAL 7037 dusty grey

Dimensions (HxB) mm	U	Order no.
530 x 400	9	501-409-03
530 x 700	9	501-709-03
750 x 400	15	501-415-03
750 x 700	15	501-715-03
950 x 400	19	501-419-03
950 x 700	19	501-719-03

12 Rear panel



- with 2 sash fasteners (standard 5 mm double-bit)

Material:
sheet metal
Finish:
RAL 7037 dusty grey

Dimensions (HxB) mm	U	Order no.
530 x 600	9	501-609-03
750 x 600	15	501-615-03
950 x 600	19	501-619-03

13 Closing systems for doors

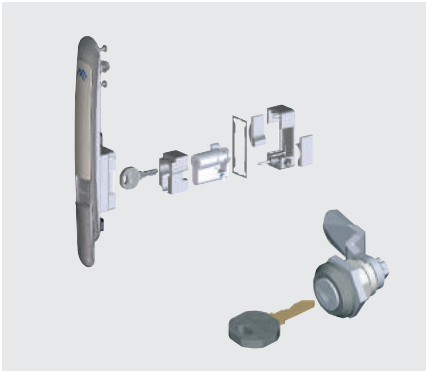

- **profile semi-cylinder** L=40mm with EK 333 closing for turning lever lock on doors
- **adapter** for installing a profile semi-cylinder with L=40 mm acc. to DIN 18252
- **cylinder sash fastener** with EK333 closing for locking side walls, rear walls or covers

Description	Order no.
Profile half cylinder	676-316-00
Adapter	676-316-10
cylinder sash fastener	676-181

14 Base

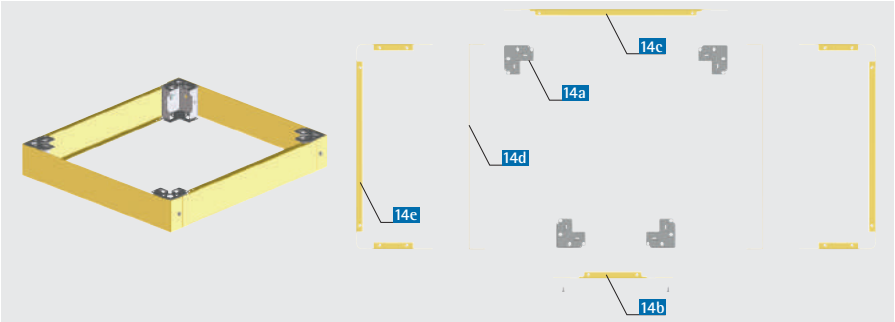

- for mounting on base enclosure
- incl. mounting material

Material:
sheet metal
Finish:
Base panels: RAL 7035 light grey
base corners: galvanised

Item	Dimensions	Size	Number of	Order no.
14a	Base corners	H = 100 mm	4 Pc.	501-100-00
14b	Base panel lateral	D = 400 mm	1 Pc.	501-100-10
14c	Base panel lateral	D = 700 mm	1 Pc.	501-100-20
14d	Base panel for door	W = 600 mm	1 Pc.	501-100-30
14e	Base panel for cover	W = 600 mm	1 Pc.	501-100-40

15 Adjusting feet (pieces)

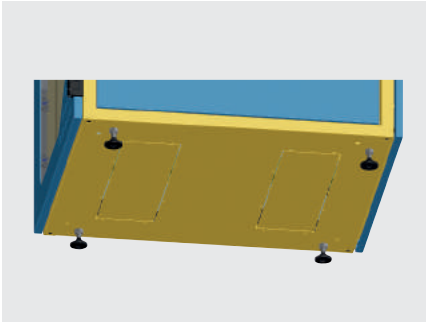

- for mounting on enclosure or base
- height 25 mm
- adjusting range approx. 20 mm
- incl. mounting material

Dimensions	Order no.
Mounting on enclosure	500-550-00
Mounting on base	318-026-02

www.apra.de

16 Castor set

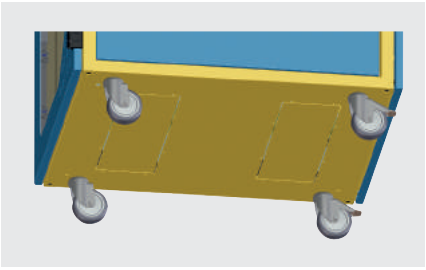

- for mounting on enclosure
- packing unit: 4 pieces (2 with brakes)
- height 105 mm
- max. load: 250 kg
- incl. mounting material

Order no.
500-330-10

17 Wall mounting set

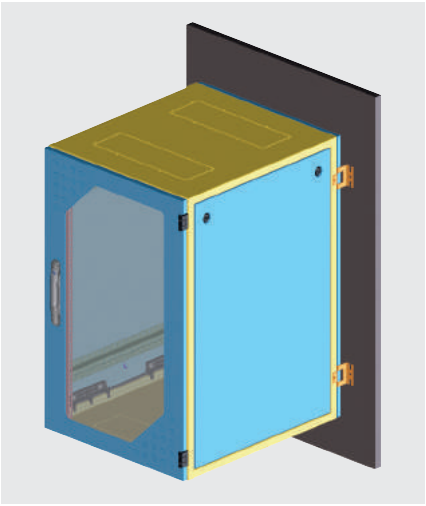

- for mounting on enclosure
- packing unit: 4 holders
- incl. mounting material

Material: sheet metal
Finish: galvanised

Order no.
501-099-00

18 Brush set for flange plate opening

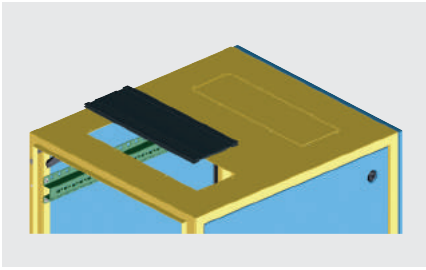

- for mounting in the break-outs (top & bottom) of the enclosure
- consisting of 2 brush strips to be fixed in the break-out

Material:
TPE, PA6 UL94 HB
Colour
black

Order no.
316-111-10

19 Cable plate with rubber insert

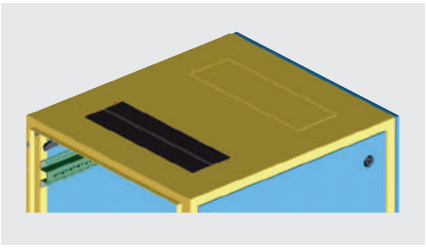

- for mounting in cut-outs from inside of enclosure
- consisting of 2 clamping brackets and 2 foam profiles
- incl. mounting material

Material:
brackets: sheet metal
foam profiles: polyurethane foam UL94 HF1
Finish:
brackets: galvanised
foam profiles: anthracite

Order no.
501-002-80

20 Cable flange plate, solid

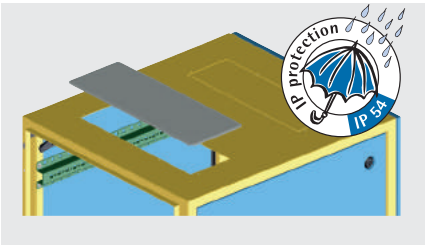

- to cover break-outs for cable entry
- completely closed incl. sealing (IP54)
- incl. mounting material

Material:
sheet metal
Finish:
RAL 7035 light grey

Order no.
501-002-50

21 Cable flange plate, ventilated

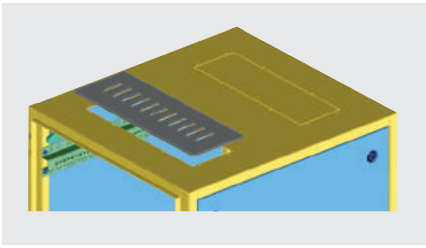

- to cover break-outs for cable entry
- with slots for passive ventilation
- incl. mounting material

Material:
sheet metal
Finish:
RAL 7035 light grey

Order no.
501-002-55

22a/22b Cover panel with multi gland plate



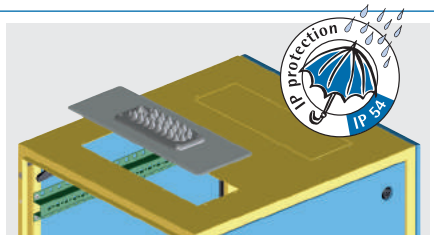

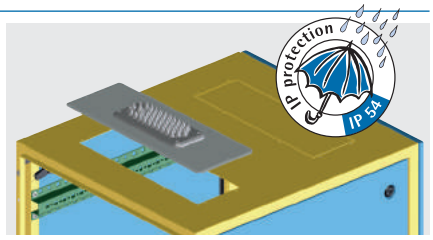

- for mounting in break-outs
- incl. multi cable gland plate for installation of different cable diameters (IP54 / see table)
- mounting material included

Material:
cover plate: sheet metal
cable gland: reinforced plastic compound, UL94 V0
Finish:
cover: RAL 7035 light grey

Number	cable-Ø
2	3,5 - 11 mm
5	10 - 14 mm
12	14 - 18 mm
5	14 - 22 mm
1	14 - 35 mm

Description	Order no.
Cover Plate Type 1	501-002-70

Number	cable-Ø
50	7 - 13 mm
1	15 - 25 mm

Description	Order no.
Cover Plate Type 2	501-002-75

23 Ventilation unit

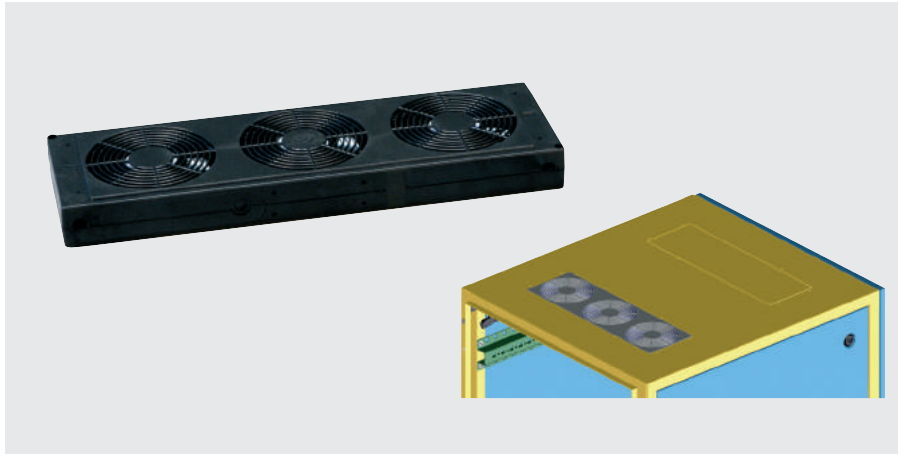

- pre-configured ventilation unit (plug & play)
- for mounting in break-outs in top & bottom
- different versions available (see table below)

Material:
Polycarbonate, UL94 V-0
Dimensions (H x W x D):
44 x 450 x 140 mm

The fan characteristics and noise levels can be found in the diagrams on page 133.

The fan module „silent" cannot be combined with an extension module!

Description	Unimpeded air flow	Basic module	Extension module
Fan module 1-way	115 m³/h	230-500-01	230-500-11
Fan module 2-way	120 m³/h	230-500-02	230-500-12
Fan module 3-way	345 m³/h	230-500-03	230-500-13
Fan module "silent"	240 m³/h	230-500-43	-

Power cord standard, L= 3 m

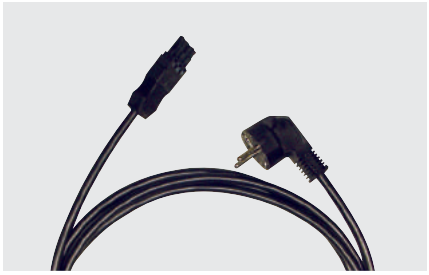

Type of connection	Order no.
Earthing-pin	640-044-05
IEC connector	230-500-15
Without plug for fixed connection	230-500-16

Power cord with thermostat 0-60 °C, L= 3 m



Type of connection	Order no.
Earthing-pin	230-500-04
IEC connector	230-500-05
Without plug for fixed connection	230-500-06

www.apra.de

24 Filter set

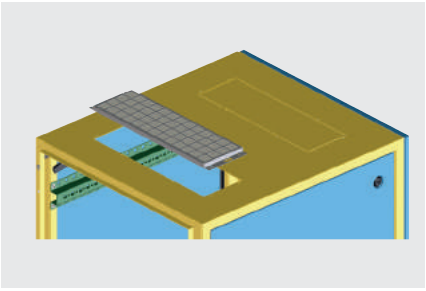

- for mounting on the break-outs or ventilation unit
- consisting of: holder and filter fleece, incl. mounting material

Material:
frame: sheet metal
filter: polyester, fire class F1
Finish:
Frame: galvanised
filter: untreated

Description	Order no.
Filter set	501-002-85
spare filters, 5x	671-200-05

Cable clamp rail set VARi IT

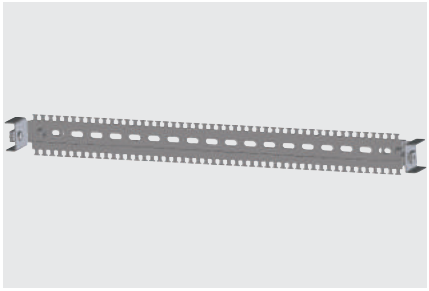

- for direct mounting on the 19 "level or depth-variable (via adapter brackets) between the depth struts of the VARI IT
- for inserting clamp clips
- including mounting material

Finish:
galvanised

Order no.
501-002-35

equipotential bonding set VARi IT

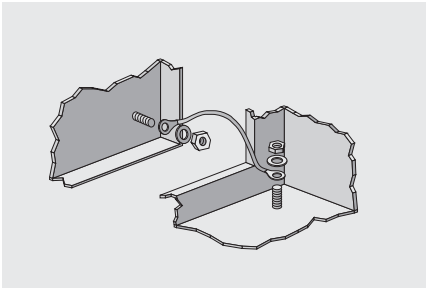

- earthing in compliance to VDE
- for conductive connection of cabinet parts (cable dia. 2,5mm²)
- plug-connector on side covers, screwed connection on rack frame

Order no.
501-150-00

Document pocket



- self-adhesive
- heat-resistant up to 60 °C
- load capacity of up to 3 kg
- your company's logo can be affixed

Dimensions H x W x D:
235 x 260 x 27 mm
Material:
plastic, black

Order no.
640-100

19" shelf 2U

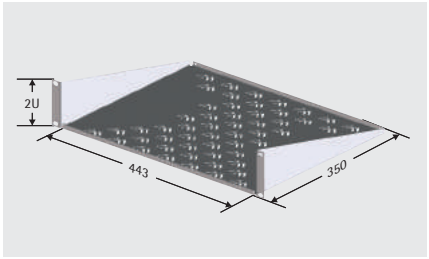

- simple assembly on a 19" grid (only one 19" level required)
- ventilated
- Footprint: 443 x 350 mm

Material:
sheet metal
Finish:
RAL 7035 light grey
Load capacity:
15 kg (distributed load)
Dimensions (H x W x D):
2 U (88 mm) x 19" (482,6 mm) x 350 mm
Floor space (w x d):
443 x 350 mm

Order no.
315-810-20

19" Cable management panel



- for horizontal cable guiding
- incl. 4 cable hoops

Material:
sheet metal / metal
Finish:
powder coated, RAL 7035 (light grey) / chrome-plated

U	Colour	Order no.
1	RAL 7035	213-145-41
1	RAL 9005	213-145-42
2	RAL 7035	213-145-43
2	RAL 9005	213-145-44

Sliding rails (screwable / hook-in)

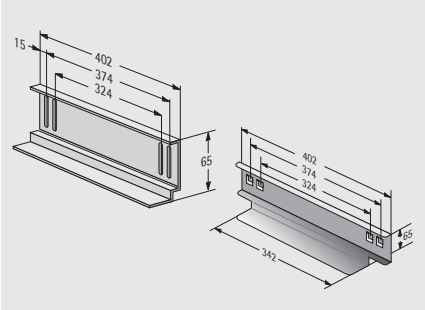

- for screwing/hinging into vertical mountings
- for placing heavy 19" plug-ins
- **2** vertical mountings are required for fixing
- Delivery: 1 pair

Material:
sheet metal, galvanized
Load capacity:
50 kg

Not suitable for hoods 8 9 10

Description	Order no.
screwable	312-544
hook-in	316-544-00

Slide rail, variable depth

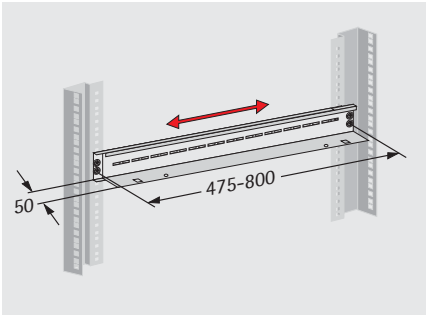

- for 19" plug-in units irrespective of the clearance to the 19" levels
- depth-adjustable
- for use as of a cabinet depth of 800 mm
- Delivery: 1 pair

Material:
sheet metal 1,5 mm, galvanised
Load capacity:
50 kg

Order no.
316-544-20

19" potential equalisation

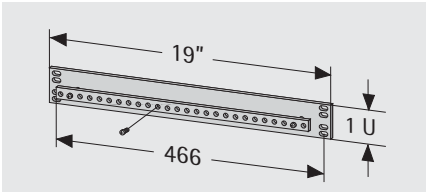

- for 19" or cabinet frame mounting
- connection: 27 x M 5
- cross-section: 50 mm2

Material: sheet metal, copper

Order no.
640-028-00

19" multiple socket 1 U



- sturdy aluminium case
- 9 sockets
- length: 440 mm
- connection line: 3 x 1,5 mm / L = 2 m
- 230 V, 50 Hz

Order no.
591-400-00

Mounting plate

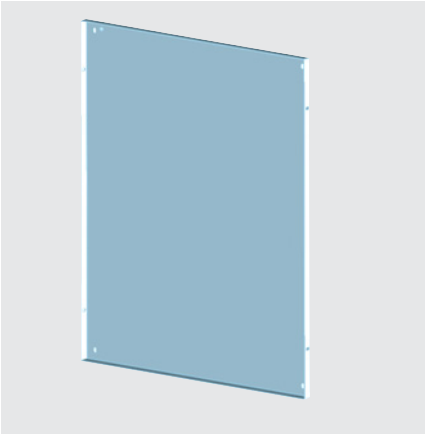

- for attaching e.g. DIN rail
- can be mounted between the depth traverses or on a 19 "level

Material:
sheet metal, galvanised

U	H mm	Order no.
9	530	501-100-69
15	750	501-100-70
19	950	501-100-71

Door switch kit



- for direct mounting at the deep trusses
- for switching on or off, e.g. cabinet lights

Delivery:
mounting material included

Order no.
501-002-37

Screw set M 5 / 6 (50x)

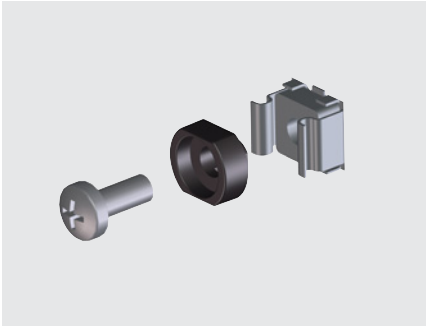

- necessary for mounting of 19" components into racks or enclosures
- included in delivery:
  - 50 oval head screws M 5 x 12
  - 50 cage nuts M 5 - 8
  - 50 decorative washers M 5

Material:
steel, polyamide

Description	Order no.
Screw set M 5	630-991
Screw set M 6	630-994
Torx M6	350-001-20


19" TiRAX cabinet system from page 11


19" NETcell cabinet system from page 65


Open 19" racks from page 83

19" floor-standing / wall-mounted enclosure VARi IT from page 97

Wall-mounting enclosure systems from page 111

Air conditioning technology from page 129

Power distribution system from page 137


Cabinet monitoring from page 155


Cable management from page 163


Distribution technology from page 169


General accessories / distribution technology from page 177



You can read more about products from the apra-group at www.apra-norm.com

www.apra.de

VARi 2000

THE REVOLUTION IN WALL ENCLOSURE TECHNOLOGY

The patent-protected wall-mounted enclosure provides you with a visually appealing and space-saving enclosure solution for your network cabling.

The conciseness of these housings lies in the construction, the 19" plane perpendicular to the wall to lay, so that the device installation depth does not project into the room

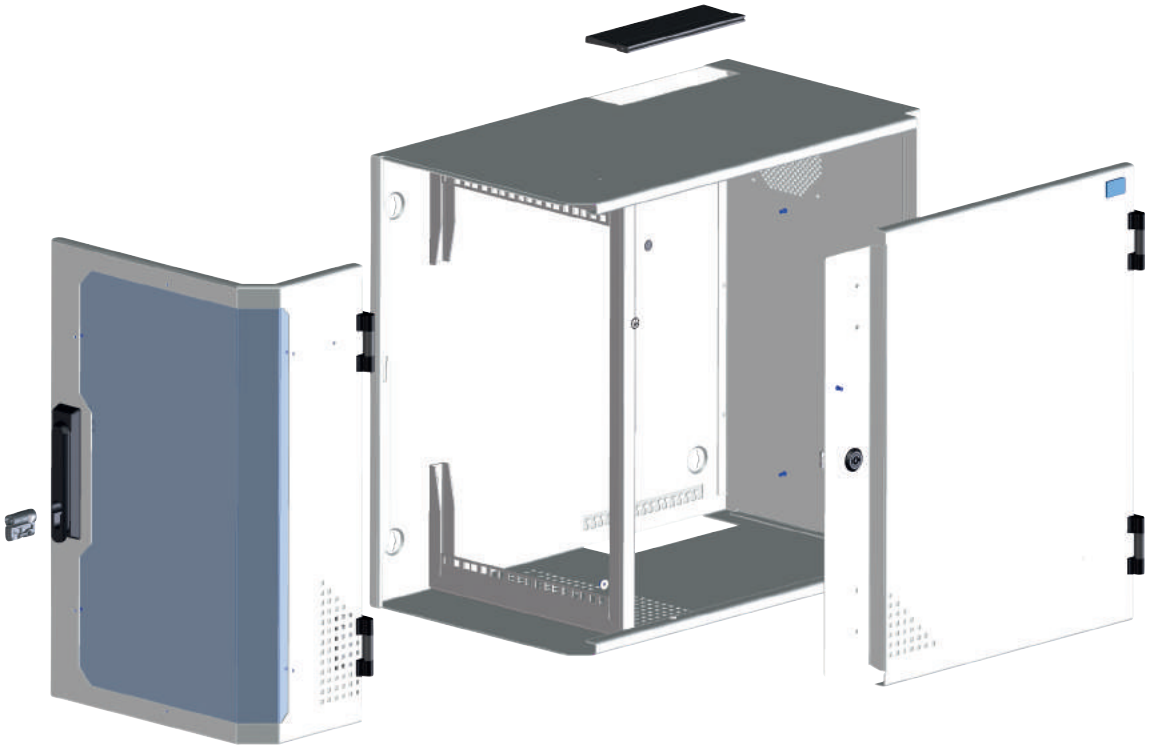

VARi 2000 Highlights

- elegantes Design
- Vertical 19"-plane
- space-saving due to the small construction of the wall compared to standard wall housings
- Installation also in a corner of a room or wall niche with full accessibility to the inside of the housing
- With the 180° hinge, the VARi 2000 can also be installed in room corners with a full 19" opening.
- Combined folding of the front and side door (profile half cylinder locking possible)
- separate access authorisations for front and side door for 6 U and 12 U versions
- Simple climate solutions
- Cable entry with integrated strain relief possible from above and below
- Installation dimensions to IEC 60297-3-100

apra net
www.apra.de



Tinted inspection door



Swing lever lock from 6 U

VARI 2000

elegant design
vertical 19"- plane
low wall construction



VARI 2000 4 U



180° opening angle



VARI 2000 with split front and side door



space-saving with single-leaf door (4 U / 6 U)

19" wall-mounting enclosure VARi 2000

The patented wall-mounted enclosure allows you the visually appealing and space-saving enclosure solution for your network cabling.
The conciseness of these housings lies in the design of laying the 19" plane vertically against the wall so that the device installation depth does not protrude into the room.

Application:
space-saving, wall-mounting enclosure for network cabling
Construction:
Robust spot-welded and powder-coated sheet steel construction
Material:
sheet metal / plastic
Finish:
RAL 7035 light grey
Delivery:
assembled (complete with earthing)
Standard
Installation dimensions to IEC 60297-3-100

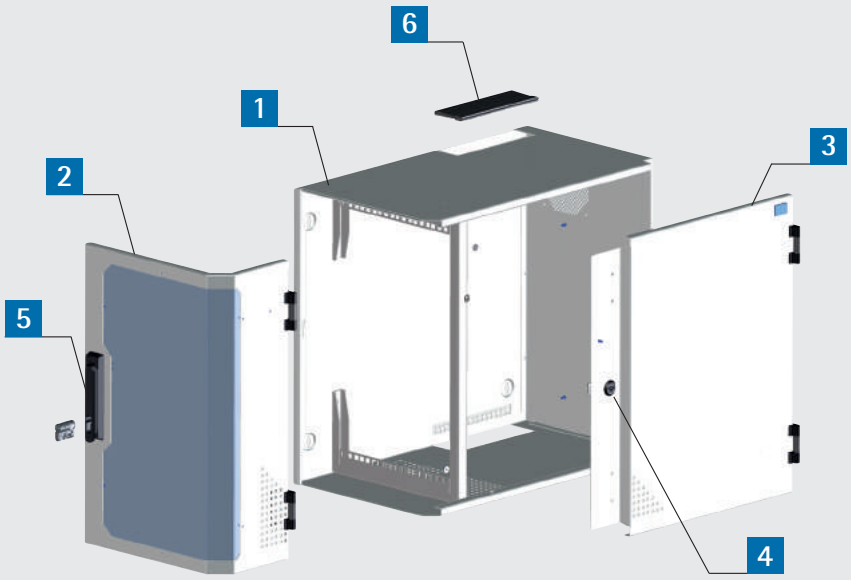

Exploded view: Vari 2000 6 U with viewing door

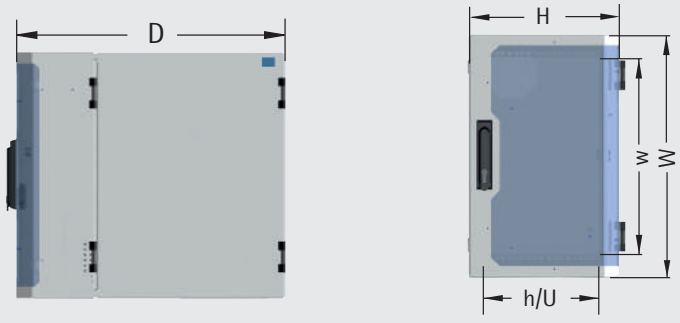

Front view

Side view

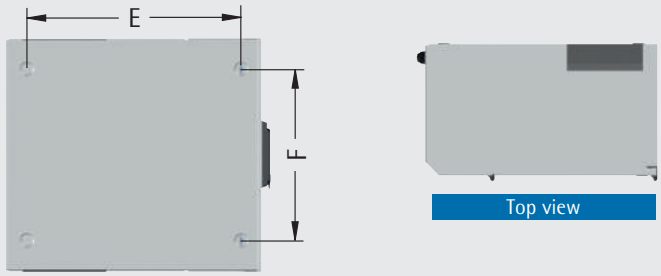

Rear view

Top view

The 12 U wall mounting enclosure is based on two 6 U 19" fastening levels which are stacked under each other. The enclosure height H therfore remains low.

Delivery

Item	4 U	6 U	12 U	Description
1	1	1	1	Enclosure chassis
2	1	1	1	Door with acrylic glass pane / steel metal door
3	-	1	1	Door, solid
4	-	1	1	Turning lever lock
5	2	2	4	Sealing brush, W=210 mm
6	1	1	1	Mounting material

Description	Property	Dimensions (H x W x D) mm	Usable installation dimensions (hxwxd) mm	Fixing Material (E x F) mm	Order no.
VARI 2000 4 U	Enclosure with single-leaf door	230 x 506 x 536	177 x 450 x 383	410 x 360	213-031-00
VARI 2000 6 U		360 x 557 x 636	267 x 450 x 475	510,5 x 408,5	213-032-60
VARI 2000 6 U	Housing with two-part door	360 x 557 x 636	267 x 450 x 475	510,5 x 408,5	213-032-00
VARI 2000 12 U		360 x 1103 x 636	267 x 2x450 x 475	510,5 x 954,5	213-034-00

apra net
www.apra.de

Mounting plate



- mounting plate for rear wall
- for mounting outlets/terminal boxes or other accessories

Finish:
galvanised

Order no.
213-030-20

Power strip (3-way)



- with overvoltage protection
- power cord (2.0 m) with earthing-pin plug
- attach to the rear wall of the enclosure
- length 335 mm

Order no.
591-200-00

Module "plug and play"



- temperature-controlled fan
- power strip, 3 sockets with overvoltage protection
- junction box
- power cord (2.0m) with earthing-pin plug
- protective equipotential bonding set

Order no.
213-030-41

Shelf 1 U, vertical



- for installation of **non-19"-compatible** components
- depth: 250 mm

Finish:
RAL 7035 light grey

Order no.
213-030-22

19" cable routing panel 1 U



- with 4 cable entry clamps made of metal
- for clear, neat and horizontal cable entry at the 19" level
- includes mounting material

Finish:
RAL 7035 light grey

Order no.
213-145-41

Profile half cylinder

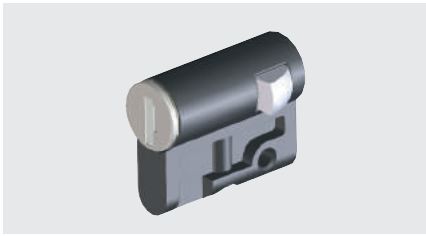

- for 6 U and 12 U enclosures **(double-leaf door)**
- for retrofitting to lockable doors
- 2 keys included
- cylinder according to DIN 18252 (EN 1303)

Order no.
676-062

Slider for profile half cylinders

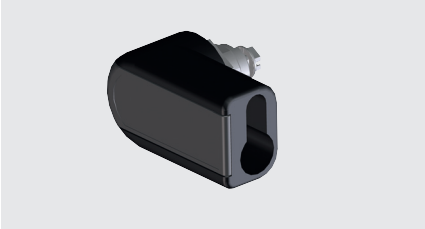

- for holding semi-cylinders according to DIN 18252 (EN 1303)
- for retrofitting to semi-cylinder locking in the version with single-leaf door (4/6 U)
- L = 40 mm

Order no.
676-110-01

Pivoting lever lock

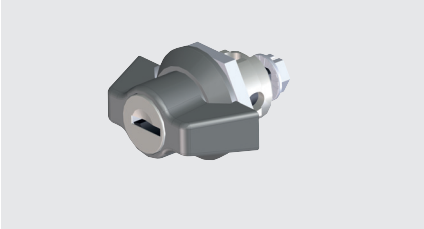

- for profile key locking for **single-leaf** door design 4 U /6 U variants

Order no.
676-197

19" Screw set M5 (50x)

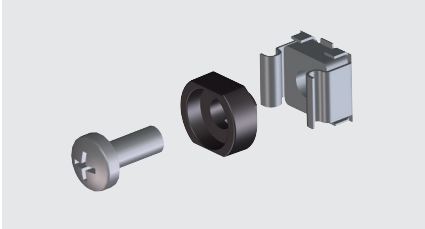

- necessary for mounting of 19" components into racks or enclosures
- included in delivery:
  - 50 oval head screws M 5 x 12
  - 50 cage nuts M 5 - 8
  - 50 decorative washers M 5

Order no.
630-991



Housing for Small Office / Home Office

- applicable as wall-/ standing- and roll housing
- Basis VARI 2000, 4 U
- expandable with active ventilation - plug & play





Wall enclosure for industrial environments (IP 54)

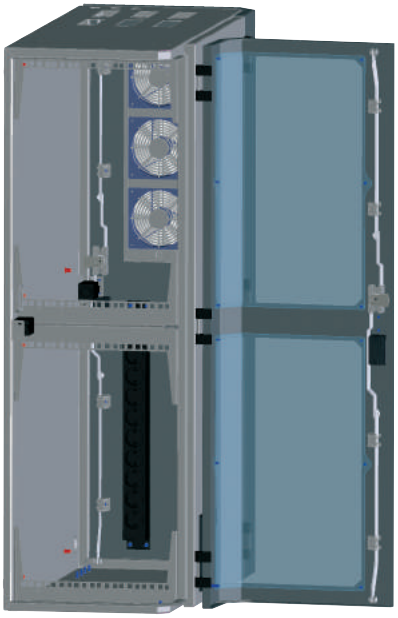



- Basis VARI Industry 12 U (2 x 6 U)
- modified for the inclusion of active and passive network technology
- Delivery as plug & play solution



www.apra.de

VARI Industry 2.0

WALL HOUSING TECHNOLOGY FOR EXTREME CONDITIONS

The visually striking and stylish enclosure is ideal for use as a compact switch cabinet solution or for network cabling in tougher environments. The high degree of protection (IP 54) and the stable structure of the enclosure protect your installations to optimum effect against dust, moisture and mechanical influences.

Enclosure height remains low due to vertical layout of 19" attachment level. The front and rear doors plus detachable front cover ensure optimum accessibility. Upper and lower cable flange plates enable the cable entry into the enclosure.

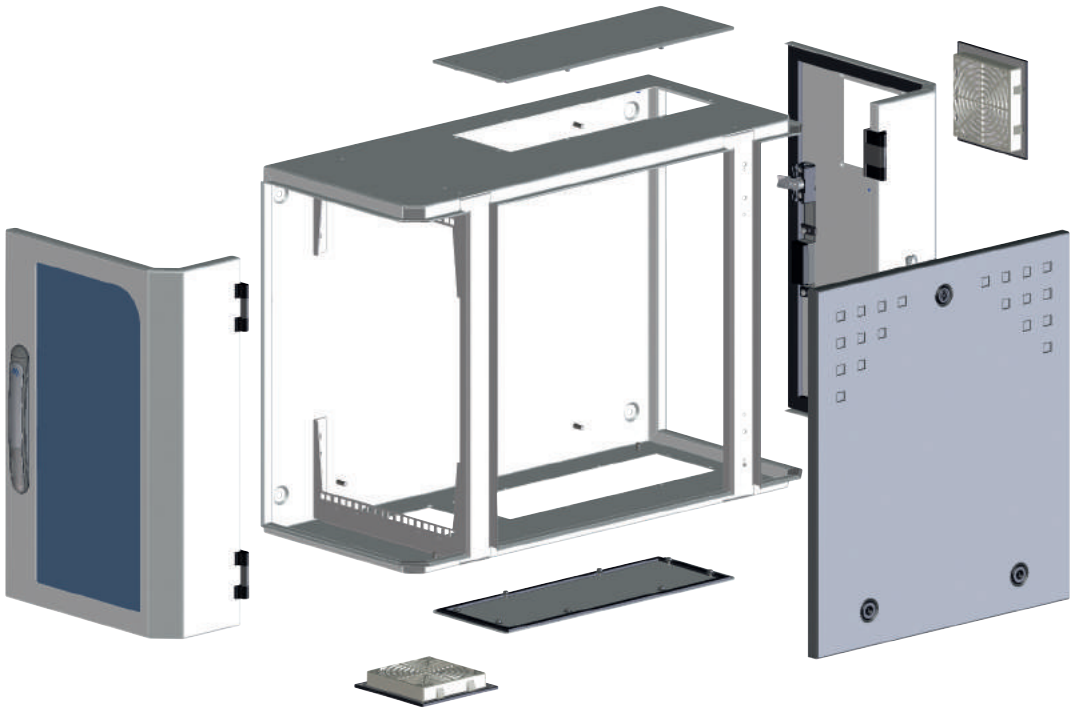

VARI Industry Highlights

- Two-Color Design
- Vertical 19"-plane
- Space-saving compared to standard wall housings due to the low construction of the wall
- Front and rear door with 180° hinge: can also be used in room corners at full 19" opening be installed
- Semi-cylinder lock possible
- Protection class IP 54
- Air conditioning options via fan or air conditioner
- Cable entry from above and below possible
- Installation dimensions to IEC 60297-3-100

www.apra.de



Two-color Design



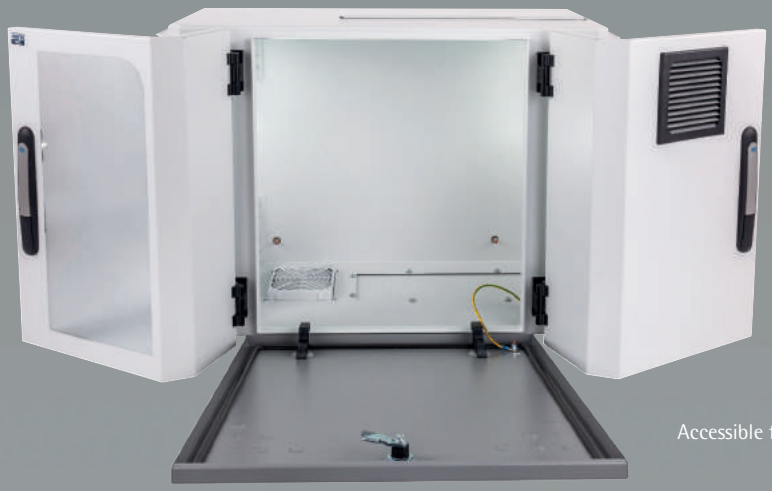

Accessible from all sides



VARIindustry

Two-Color Design, accessible from all sides, vertical 19"-plane



Swing lever lock



VARI Industry

Application:
Use as wall-mounting enclosure for tight spaces and unfavourable environmental conditions such as high humidity and dust

Construction:
sturdy spot-welded and powder-coated sheet metal construction

Finish:
RAL 7035 light grey / RAL 7037 dusty grey

Protection class:
IP 54

Load capacity:
70 kg (static)

Standards:
Installation dimensions to IEC 60297-3-100

Delivery:
assembled
Wall mounting dimensions

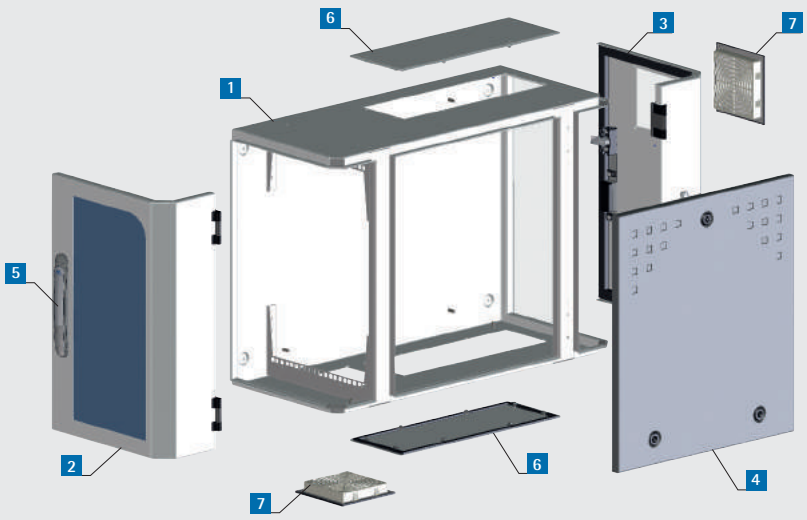

Exploded view: VARI Industry 6 U

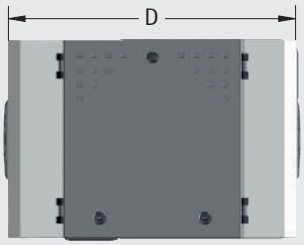

Front view

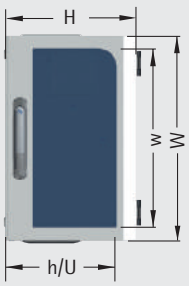

Side view

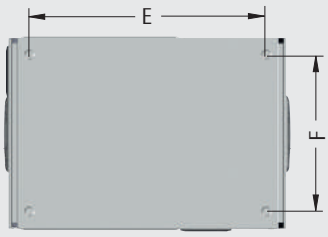

Rear view



Top view

Delivery

Item	pc.	Description
1	1	Enclosure chassis
2	1	Door with plexiglas pane
3	1	Door with cutout for fans
4	1	Front cover, detachable
5	2	Turning lever locks with tipp button opening
6	2	Cable flange plates
7	2	Outlet filter, IP 54, for 119 x 119mm fans
	1	Mounting material

Description	Outer dimensions (H x W x D) mm	Usable installation dimensions (h x w x d) mm	Wall mounting dimensions (E x F) mm	Order no.
VARI Industry 4 U	275 x 560 x 840	177 x 449 x 650	680 x 450	306-040-80
VARI Industry 6 U	365 x 560 x 840	267 x 449 x 650	680 x 450	306-060-80

www.apra.de

VARI Industry "cool box" 6 U

- air-conditioned wall-mounting enclosure for industrial environments
- 380 W cooling unit can be assembled on the detachable front cover

Finish:
RAL 7035 light grey / RAL 7037 dusty grey
Dimensions (H x W x D):
522 mm x 560 mm x 840 mm
Degree of protection:
IP 54
Delivery:
prepared for mounting of cooling unit (cooling unit included in delivery)

Order no.
306-060-20



Sample configuration · Colouring does not correspond to standard colours.

Power strip (3-way)



- with overvoltage protection
- power cord (2.0m) with earthing-pin plug
- attach to the rear wall of the enclosure
- length 335 mm

Order no.
591-200-00

Module "plug and play"



- temperature-controlled fan
- power strip, 3 sockets with overvoltage protection
- junction box
- power cord (2.0m) with earthing-pin plug
- protective equipotential bonding set

Order no.
213-030-41

Mounting plate

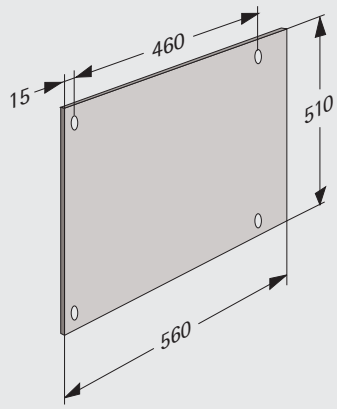

- for mounting of components
- includes mounting material

Finish:
galvanised

Order no.
306-060-70

Fan set

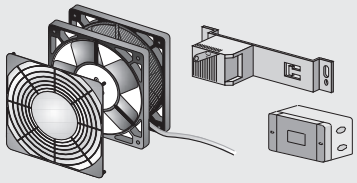

Fan set consisting of:
- fan, 230 V, 160 m^3/h, 41 dB(A)
- fan guard
- outlet
- thermostat, 0-60°C

Delivery:
assembly set with mounting mat.

Order no.
306-060-15

Pivoting lever lock

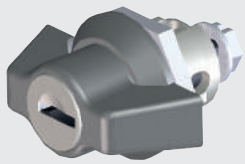

- for profile key lock of the front cover

Order no.
676-197

Profile semi-cylinder 45°

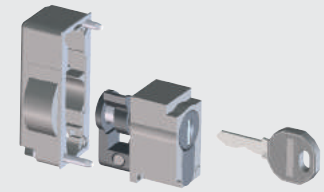

- Profile half cylinder with lock EK 333 for pivoting lever lock
- for retrofitting on lockable doors with key
- including 2 keys

Order no.
676-316-00

Cover panel with multi gland plate



Number	cable-Ø
2	3,5 - 11 mm
5	10 - 14 mm
12	14 - 18 mm
5	14 - 22 mm
1	14 - 35 mm

Number	cable-Ø
50	7 - 13 mm
1	15 - 25 mm

- for mounting in break-outs
- incl. multi cable gland plate for installation of different cable diameters (IP54 / see table)
- incl. mounting material

Description	Order no.
Cover Plate Type 1	501-002-70

Description	Order no.
Cover Plate Type 2	501-002-75

Material:
cover plate: sheet metal
cable gland: reinforced plastic compound, UL94 V0
Finish:
cover: RAL 7035 light grey

"Universal" velcro strip



- for quickly securing **non 19"-compatible** components
- length: 300 mm, width: 20 mm
- back to back mounting
- set = 10 pieces

Material:
velcro, black

Order no.
671-122-08

Screw set M 5 / M 6 (50-fold)

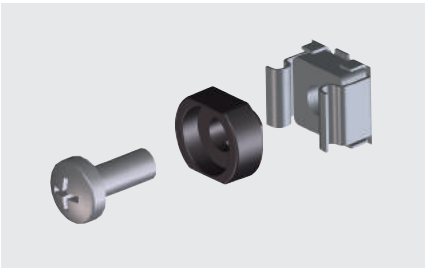

- necessary for mounting of 19" components into racks or enclosures
- included in delivery:
  - 50 oval head screws M 5 x 12
  - 50 cage nuts M 5 - 8
  - 50 decorative washers M 5

Description	Order no.
M 5	630-991
M 6	630-994

19" Potential equalisation bar 1 U

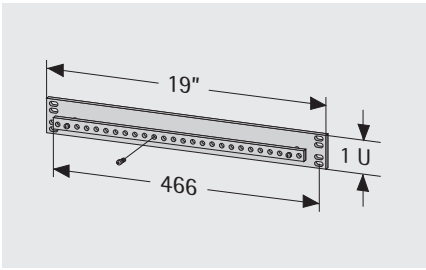

- for 19" or cabinet rack installation
- connection options: 27 × M 5
- rail cross-section: 50 mm2

Material:
sheet steel, copper

Order no.
640-028-00

350 • optiRACK wall-mounting enclosure

www.apra.de

optiRACK

The optiRACK wall mounting/stand-alone enclosure makes networking installations simple, since the detachable door and side panels enable optimum accessibility inside the enclosure. Cabling can therefore be performed in the open rack. The two-coloured design and the chamfered front upgrade its appearance significantly. The standard colour of the design profile is RAL 5014 (pigeon blue); other colours may be supplied on request.

- protection class IP 20
- stylish enclosure solution
- optimum accessibility
- installation in just a few steps
- the coloured profile may be used as thematic coding. Through the use of coloured profiles in corporate colours, corporate identity can also be expressed in the network installation.

Application:
space-saving wall-mounting enclosure for network cabling
Material:
sheet steel
Finish:
Enclosure: painted RAL 7035 light grey
Design profile: painted in RAL 5014 pigeon blue
Delivery:
flatpack (disassembled)

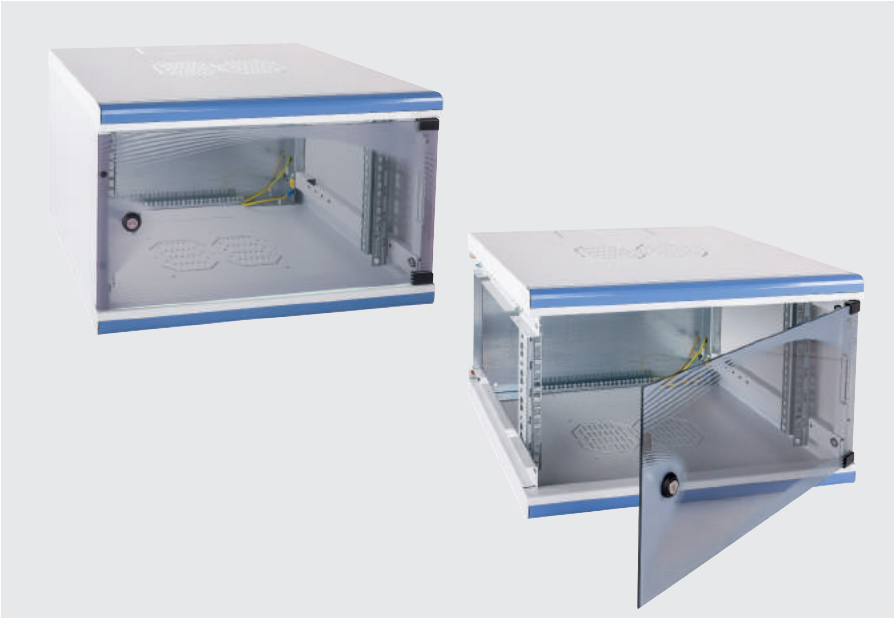

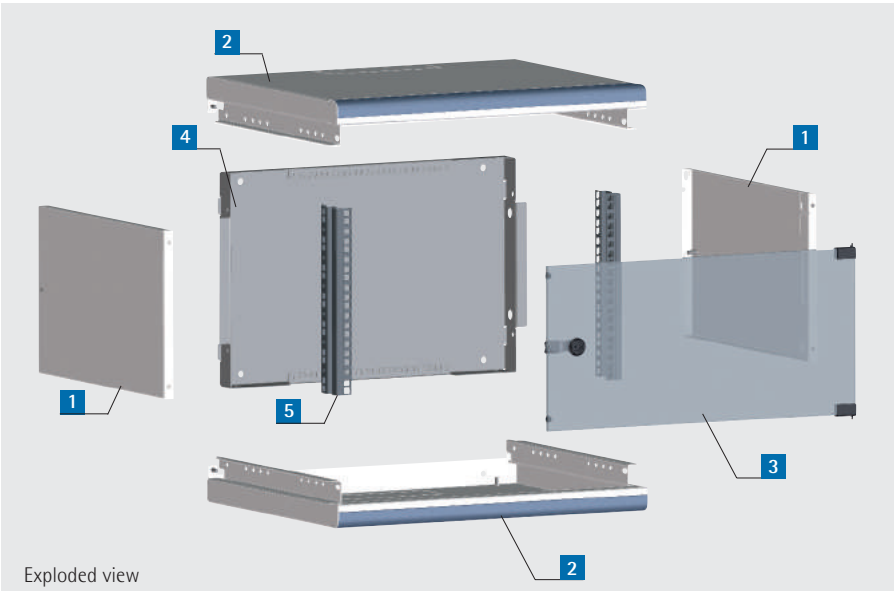

Exploded view

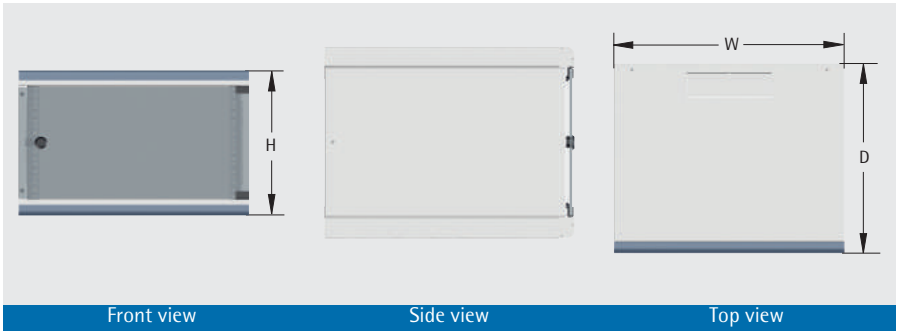

Front view | Side view | Top view

Delivery

Item	pc.	Description
1	2	Side panels
2	2	Top/bottom plate with precut openings for cable entry
3	1	Viewing door with 180° hinge (profile locking EK333)
4	1	Rear wall
5	2	Individually depth adjustable 19" vertical mountings
	1	equipotential bonding set
	1	Cable entry brush

Description	Outer dimensions (H x W x D) mm	Order no.
optiRack 6 U	345 x 550 x 450	350-002-06
optiRack 9 U	480 x 550 x 450	350-002-09
optiRack 12 U	612 x 550 x 450	350-002-12
optiRack 15 U	745 x 550 x 450	350-002-15

optiRACK “silent” underbench cabinet

- sound-insulating enclosure with viewing door
- detachable side panels
- 19” expansion 12 U variable depth

Available in two versions:
Version 1 “passive”:
with ventilation grille (prepared without fan for passive ventilation of the enclosure)
Version 2 “active”:
prepared with speed-controlled fan for active ventilation of the enclosure (fan: 12 V DC, 150 m3/h free-blowing, 37 dB(A)

Material:
sheet metal
Finish:
enclosure: RAL 7035 light grey
Design profile: RAL 5014 pigeon blue (other colours on request)
Dimensions (H x W x D):
12 U (615 mm) x 550 x 600 mm
Delivery:
assembled



Fig: Version 2 “active”

Description	Order no.
Version 1 “passive”	350-001-60
Version 2 “active”	350-001-61

19” vertical mounting

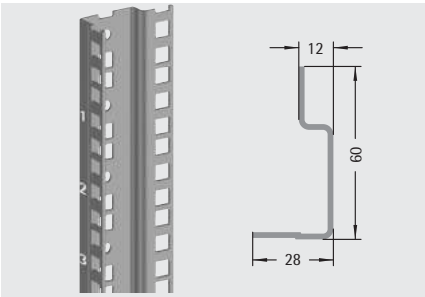

- with U-labelling
- height: 12 U

Material:
sheet metal, galvanised

Order no.
316-120-12

Slide rail, hook-in

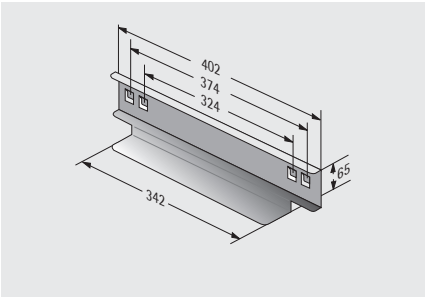

- hooked in the 19” vertical mountings
- to support heavy 19” plug-in units
- two 19” levels are required

Material:
Stahlblech 1,5 mm, galvanised
Load capacity:
50 kg

Order no.
316-544-00

19” shelf 2 U, fixed

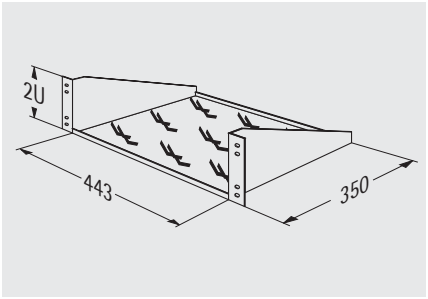

- simple assembly on a 19” grid (only one 19” level required)
- ventilated

Material:
sheet metal
Finish:
RAL 7035 light grey
Load capacity:
15 kg (distributed load/static)
Dimensions (H x W x D):
2 U (88 mm) x 19” (482,6 mm) x 350 mm
Floor space (w x d):
443 x 350 mm

Order no.
315-810-20

213 • LAN small distribution cabinet

www.apra.de

Small LAN distribution cabinet

- compact dimensioned housing
- Separation of patch room and cable entry area by two lockable doors with different locking systems
- Modular distribution field frame, which can accommodate up to four partial front panels 3 U / 8 HP
- suitable for mixed data plug mounting (Gf / Cu hybrid equipment)
- active components such as e.g. Mini-HUBs can be easily integrated
- Cable entry with brush seal at top and bottom
- Cable entry in patch room over max. 4 PG16 fittings (M20)

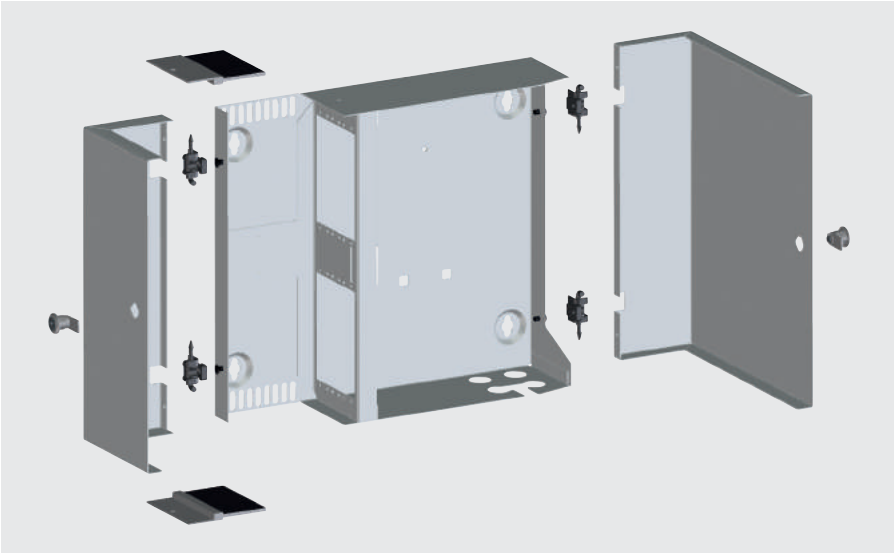

Material:
sheet metal
Finish:
RAL 7035 light grey
Dimensions (H x W x D):
405 mm x 100 mm x 330 mm
Delivery:
assembled



Smple configuration with mini-hub CAT.6 und LSA-Plus



two locking systems



integrated brush seal

Upon request, you will receive customized front panels according to your specifications!

Delivery

Item	pc.	Description
1	1	Enclosure chassis
2	2	Door with different locking systems
3	2	Brush seals
4	1	Distribution panel

Order no.
213-020-15

FO front panels 3 U, 8 HP



Photo shows 12 x ST

- for assembly of the non-configured FO small distribution cabinet
- front panels are numbered consecutively
- a maximum of 4 part front panels can be integrated into the LAN small distribution cabinet

Material: aluminium 2,5 mm
Finish: anodised

Front panels for other plug-in connectors on request!

Description	Order no.
Front panel 12 x ST	213-308-01
Front panel 12 x SC (6 x SC-Duplex)	213-308-02
Blind panel 3 U, 8 HP	243-308-00

CAT.6A, 6-way/12-way

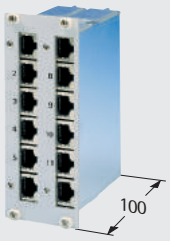

Photo shows 12 x RJ45

- shielded CAT.6A distribution panel
- 6-way RJ 45 (3 U / 8 HP) or 12-way RJ 45 (3 U / 10 HP)
- metal enclosure with large lowimpedance galvanised surfaces
- LSA Plus connecting system
- labelled aluminium front panel

Finish:
Front panel: anodised
Enclosure: galvanised

Description	Order no.
6-way distribution panel	213-503-10
12-way distribution panel	213-503-30

www.apra.de

Further accessories for our wall housings can be found here:



Power distribution system

Socket strips and other power supply components can be found from page 137 onwards.

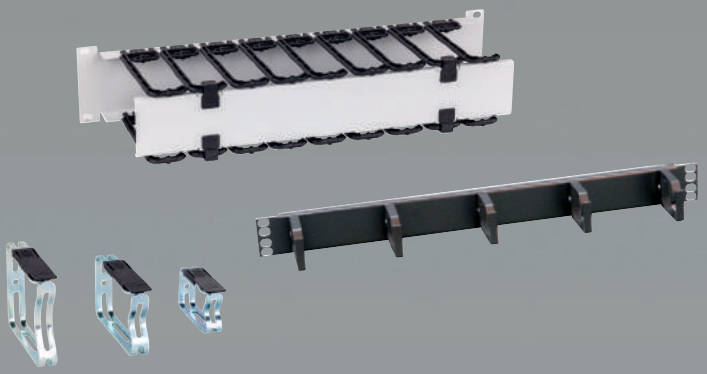

Cable management

Suitable cable routing solutions such as cable brackets, patch panels etc. can be found from page 163 onwards.

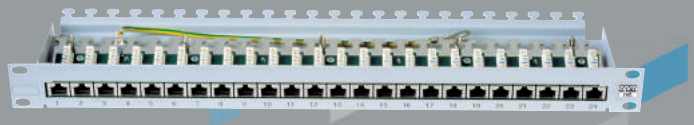

Distribution technology

DIN rail solutions, module technology, splice boxes and distribution panels can be found from page 169 onwards.



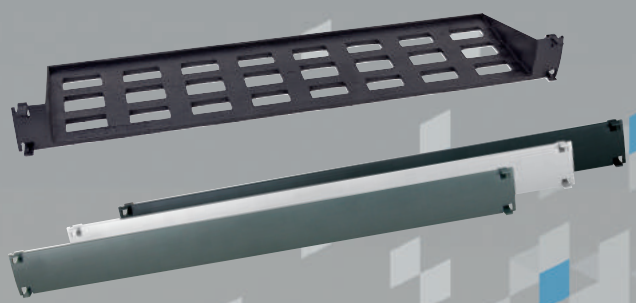

General accessories

Shelves, blind plates, slide rails and other useful accessories can be found from page 177 onwards.

For your notes

www.apra.de

Important notes:

Questions for the sales team:


19" TiRAX cabinet system from page 11


19" NETcell cabinet system from page 65


Open 19" racks from page 83


19" floor-standing / wall-mounted enclosure VARi IT from page 97

Wall-mounting enclosure systems from page 111

Air conditioning technology from page 129

Power distribution system from page 137

Cabinet monitoring from page 155

Cable management from page 163


Distribution technology from page 169


General accessories / distribution technology from page 177



You can read more about products from the apra-group at www.apra-norm.com

Air conditioning technology

www.apra.de



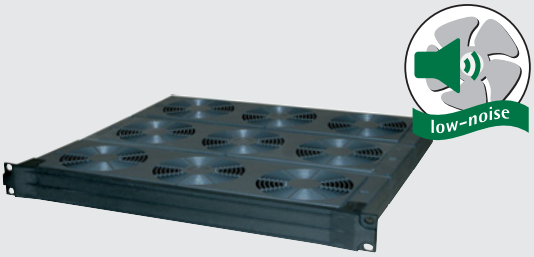



Air conditioning units

from page 131

- standard applications and individual solutions for all our cabinets and wall-mounting enclosures with protection class IP 54
- low servicing costs thanks to filterless technology
- extremely compact unit sizes with high efficiency

Plastic fan module

from page 132

- for high-volume ventilation of enclosures or cabinets
- compact dimensions
- easy assembly
- sophisticated modularity protected by a utility patent
- also available as speed-controlled variants
- 19"-compatible
- also available as "Silent" low-noise fan

Roof ventilation

from page 134

- low noise
- large air flow
- Alternative to cabinet air conditioner
- low noise level - suitable for the office environment







apra cooling system

from page 135

- air/water heat exchanger
- optimum cooling for server racks with a high packing density
- up to 56 KW
- precision air conditioning for data centres

www.apra.de

Air conditioning units

- optimum temperature for maximum efficiency
- standard applications and individual solutions for virtually all our cabinets and wall-mounting enclosures with protection class IP 54
- subsequent installation of cooling devices: the units are supplied ready to use (mounting material included in the scope of delivery).
- low servicing costs thanks to filterless technology
- extremely compact unit sizes with high efficiency
- heat build-up inside the cabinet is prevented by the continual circulation of cabinet air.
- all units use CFC-free refrigerant.
- cooling capacity acc. to EN814 Ta35 Ti35
- integrated electronic control unit and thermostat

Material:
enclosure: sheet metal
front panels: plastic
Finish:
RAL 7035 light grey
Delivery
- operating instructions
- mounting materials including drilling template
- connector plug

Cooling units with higher specifications and systems with a water recool unit are also available on request.





Cooling System

Wall mounting/installation				
Cooling capacity W	**Voltage / frequency** V/Hz	**Dimensions H x W x D** mm	**Noise level** dB(A)*	**Order no.**
380	230 / 50-60	460 x 285 x 180	60	235-200-08
1050	230 / 50-60	950 x 400 x 233	65	235-200-07
2050	230 / 50-60	1265 x 400 x 236	65	235-200-05
2900	230 / 50-60	1270 x 500 x 336	70	235-200-18
3850	230 / 50-60	1270 x 500 x 336	70	235-200-19
Top mounted				
410	230 / 50-60	264 x 259 x 486	60	235-200-10
1550	230 / 50-60	415 x 401 x 567	65	235-200-12
2050	230 / 50-60	415 x 401 x 567	65	235-200-14
3850	230 / 50-60	496 x 492 x 797	75	235-200-22

* The noise level of the cooling units is measured acc. to EN ISO 3744, but it does not take into account the installation conditions of the units on the rack. Therefore the noise level can be considerably higher due to the operating environment and installation conditions.

Heating system

Cabinet heating systems (excl. thermostat)			
Heat capacity W	**Voltage/frequency** V / Hz	**Dimensions (H x W x D)** mm	**Order no.**
100	230 / 50 - 60	182 x 70 x 50	235-200-09
150	230 / 50 - 60	262 x 70 x 50	235-200-06
Heater fan (incl. thermostat)			
350	230 / 50 - 60	165 x 100 x 128	235-200-27

Thermostat for cabinet heating 0-60 °C	640-104-03

230 • Plastic fan module

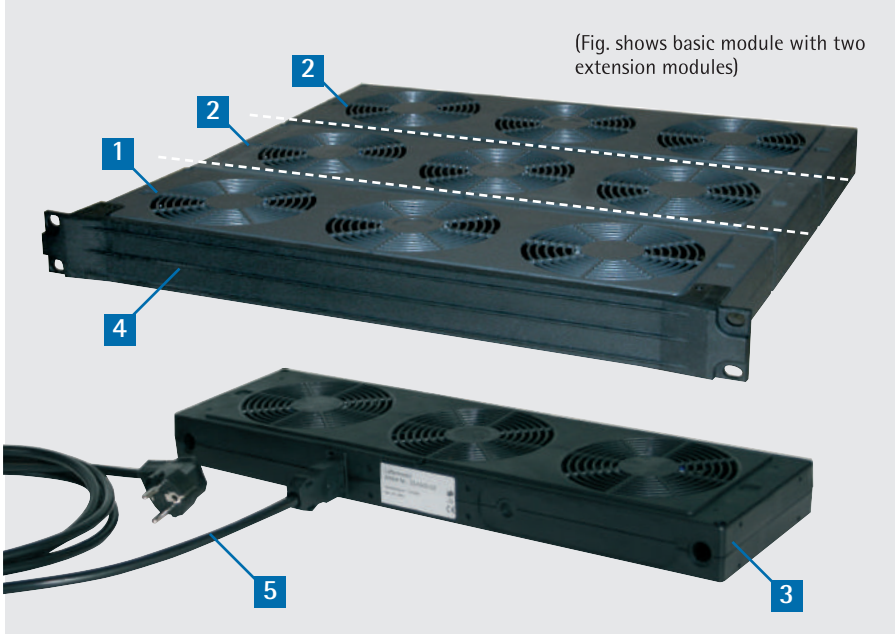

Basic module

Description	Air flow rate, unimpeded	Order no. Basic module 1	Order no. Extension module 2
1-way	115 m³/h	230-500-01	230-500-11
2-way	230 m³/h	230-500-02	230-500-12
3-way	345 m³/h	230-500-03	230-500-13

Ventilation module "silent"

geräuscharm

The fan module „silent" cannot be combined with an extension module!

Description	Air flow rate, unimpeded	Noise Level	Order no. Modul "silent" 3
3-way	240 m³/h	45,5 dB(A) / 20 µPa	230-500-43

Accessories

19" installation kit, 1 U 4



Material: plastic
Finish: RAL 9005 jet black
Dimens. (H x W x D): 44 × 450 × 146 mm

Order no.
230-500-70

Power cord cables 5

Power cord standard



Power cord with thermostat



Type of connection	Power cord, standard	Power cord with thermostat 0-60 °C
Earthing-pin plug	640-044-05	230-500-04
IEC connector	230-500-15	230-500-05
Without plug for fixed connection	230-500-16	230-500-06

Plastic fan module

- incomparably light
- low-cost
- easy assembly
- sophisticated modularity protected by a utility patent
- suitable for all applications relating to enclosure and cabinet technology
- can be installed in just a few steps in a 19" grid using the 19" mounting kit.
- long service life and high system reliability due to high-quality fans
- integrated fan cover
- by using state-of-the-art plastics of class UL94 V-0, the new system meets the highest fire safety requirements.

Material:
plastic, fire class to UL94 V-0
Finish:
black (similar to RAL 9005 jet black)
Dimensions (H x W x D):
44 x 450 x 140 mm

The **basic module** 1 is available as a 1, 2 or 3-fan unit and has 8 fixing points, which enable installation for any application and location. Power is supplied via a plug contact at the back of the enclosure. This plug contact enables preconfigured cables and thermometers to be used (see accessories) and of course also provides you with an interface to your own cable configuration.

The **extension module** 2 is also available as a 1, 2 or 3-way unit and is a pluggable multi-way extension for the basic fan module. The mechanical connection of the modules is realised via aluminium guide pins (included in the scope of delivery). The extension module has a plug connector on the front and a socket on the back. Series linking in this way enables the electrical connection between the modules to be established automatically.

www.apra.de

Fan characteristics

U	230 VAC	230 VAC	f	50 Hz	50 Hz
I_{V0}	347 mA	221 mA	I_{Vmax}	344 mA	226 mA
P_{V0}	59.12 W	38.17 W	P_{Vmax}	56.49 W	38.25 W
n_{V0}	2513 1/min	1715 1/min	n_{Vmax}	2656 1/min	19.39 1/min

b: barometric level t: temperature φ: rel. humidity ρ: air density U: voltage f: frequency I: power P: performance n: rotation frequency

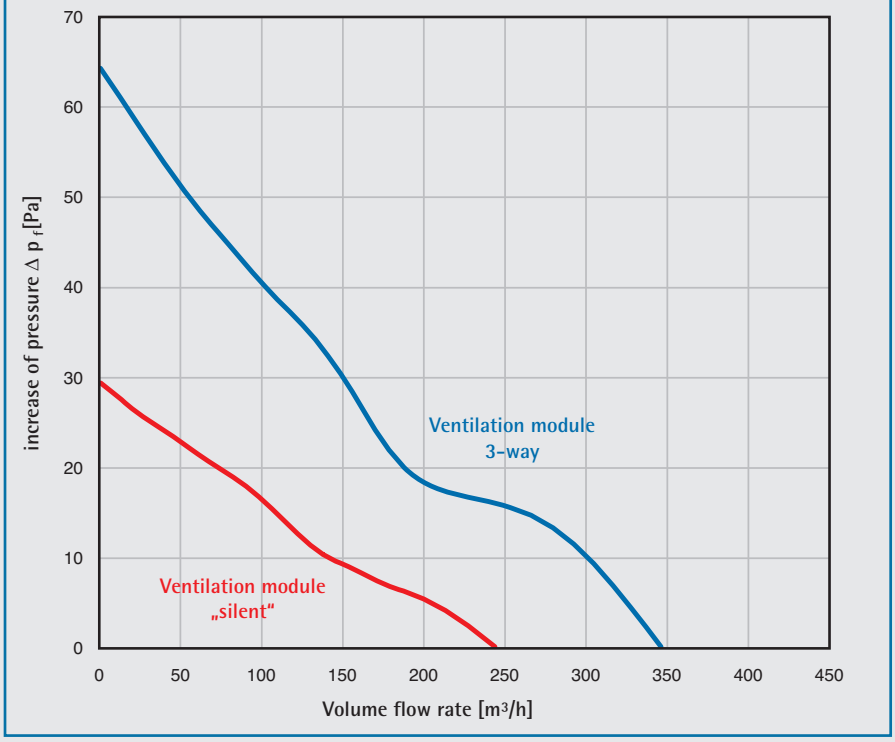

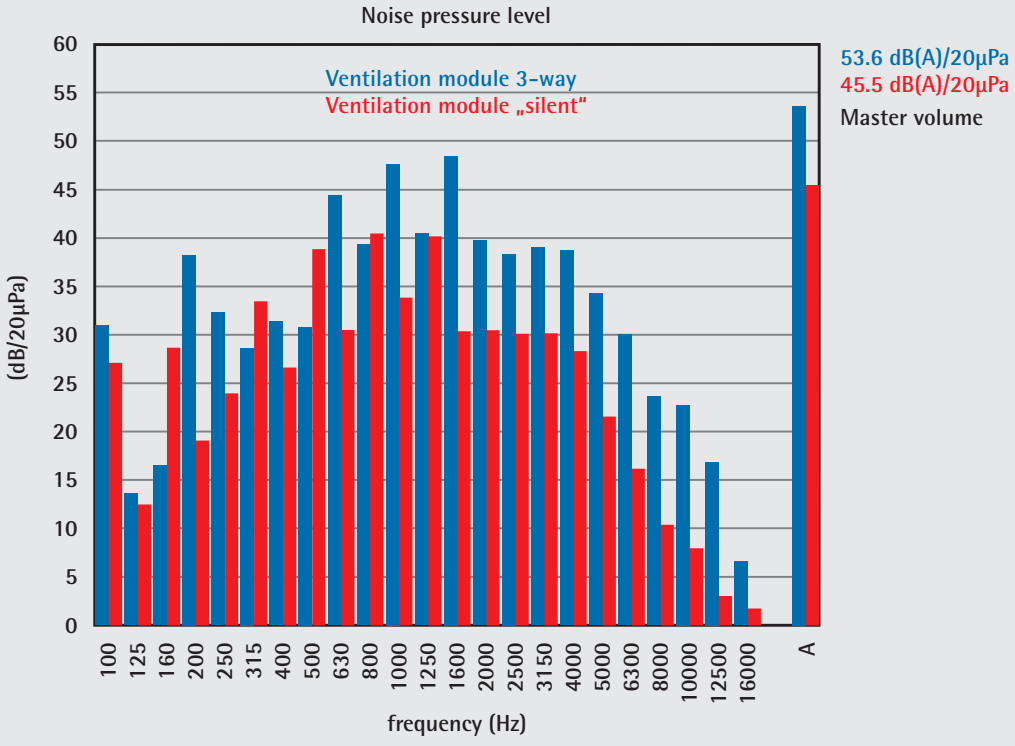

Roof ventilation unit "Silent" for TIRAX cabinet system

- This roof ventilation unit "Silent" distinguishes by its low noise level and large airflow.
- Due to these features it may be a good alternative to a climate control unit.
- The low noise level of the roof ventilation unit enables it for office application. The rear of the top cover offers a **break-out possibility for a cable entry** (a).

Material:
sheet steel
Finish:
RAL 7035 light grey
Delivery
roof including fan and mounting material

A sufficient volume of air inlet, e.g. in the bottom area or via a base with ventilation slots needs to be taken in consideration. A deficiency of the same may reduce efficiency of ventilation.



In the rear area of the roof panel there is an opening possibility for a cable entry (a)

Technical information

Airflow (free blowing)	1545 m^3/h
Noise level (fan)	40 dB (A)
Operating voltage/frequency	230 V / 50-60 Hz
Power consumption	68 W / 50 Hz
Size hood (H x W x D)	228 x 551 x 551 mm

Order information

Description	Dimensions W x D x H	Order no.
Roof plate with fan	800 x 800 x 230	318-019-08
Roof plate with fan	800 x 1000 x 230	318-019-10
Roof plate with fan	800 x 1200 x 230	318-019-12
Brush set for roof ventilation unit "Silent"		316-111-10
Power lead (3 m) with thermostat 0-60 °C		230-500-04

www.apra.de

apra cooling system "Front-/Sidecooler"

- the „Front-/Sidecooler" was especially developed for cooling server racks with high packing densities and through the targeted air routing inside the cabinet ensures the reliable cooling of all servers
- high cooling capacity, even at high flow temperatures
- horizontal air routing throughout the entire height of the cabinet works to optimum effect and is extremely effective in conjunction with servers in a 19" design
- very space-saving due to compact design
- all water-carrying components are located outside the server cabinet.
- the system works with a closed air circuit in the rack and is therefore independent of its environment
- the air routing can be either via one or both sides, if there is mounting between two racks





Close cooperation with leading air conditioning companies enables us to react flexibly to customer requirements. Thanks to individual air-conditioning concepts, apraNET meets the most diverse requirements.

Contact us - we will be happy to advise you: 0 65 92 / 95 12-0

Important notes:

Questions for the sales team:


19" TiRAX cabinet system from page 11


19" NETcell cabinet system from page 65


Open 19" racks from page 83


19" floor-standing / wall-mounted enclosure VARi IT from page 97


Wall-mounting enclosure systems from page 111

Air conditioning technology from page 129


Power distribution system from page 137

Cabinet monitoring from page 155

Cable management from page 163


Distribution technology from page 169


General accessories / distribution technology from page 177

You can read more about products from the apra-group at www.apra-norm.com

Power distribution system

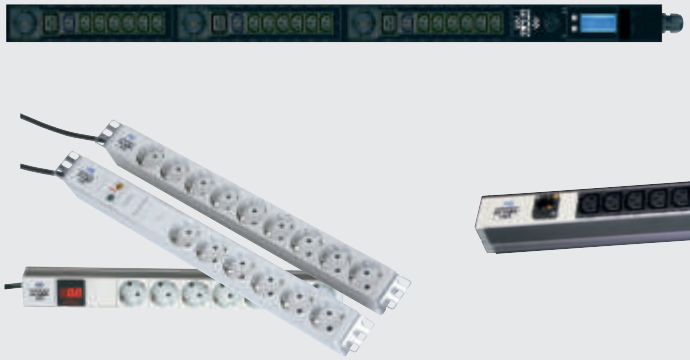







Multiple socket strips (PDU)

Page 140

- Earthing-pin
- UTE (France)
- IEC connectors IEC-C13

RZ flex PDU

Page 142

- Earthing-pin
- IEC connectors C19 with IEC-Lock
- IEC connectors IEC-C13
- RZ flex PDU

19" power distribution units

Page 148

- modular 19" power distribution systems





Configure your own PDU system

Page 146

- PDU configurator

USV systems, 19" devices

Page 150

- 19" line Interactive VI-SS-211
- 19" online continuous transducer FI-SS-111

www.apra.de

Our service for you: Pre-wiring, power supplies, plug-and-play versions in enclosures and cabinet systems

☑ take advantage of our expertise ☑ save time and money

The apra Group places particular emphasis on individual and flexible system solutions. Our enclosures and 19" cabinet systems are equipped with components such as a power supply and power distribution system in line with customer requirements and are supplied with full pre-wiring. This enables us to fulfil a wide range of customer requirements.

From development right through to the finished product, you can benefit from our expertise and flexibility!

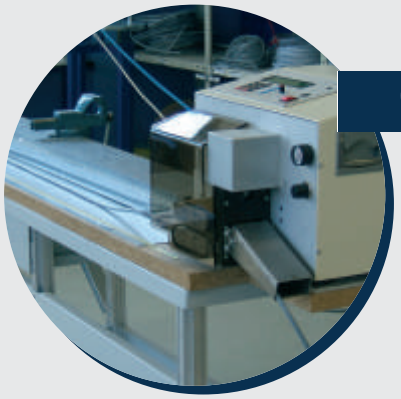

Customised cables and connections

- stripping and cutting cables and wires to length by machine
- connecting wires with a crimp machine
- labelling and marking the cables, wires and connectors



Assembly and pre-wiring at installation locations



Quality and safety checks in accordance with VDE regulations

- testing electrical devices with the specified test process
  (aside from electrical measurements, e.g. protective earth conductor resistance, leakage current, insulation and high-voltage measurements (AC/DC), quality tests can also be carried out in the form of text or image test points.)
- workstation for continuity checks on configured cables and backplanes in subracks

Multiple socket strips

- space-saving design
- stable aluminium enclosure
- suitable for 19" mounting in 1 U division (L = 440 mm) and/or cabinet rack mounting
- connection: 3 × 1.5 mm²
- standard cable length: 2.0 m
- earthing-pin plug and UTE standard sockets: twisted 35°
- incl. mounting bracket



two-pin earthed plug 230 V AC, 16 A

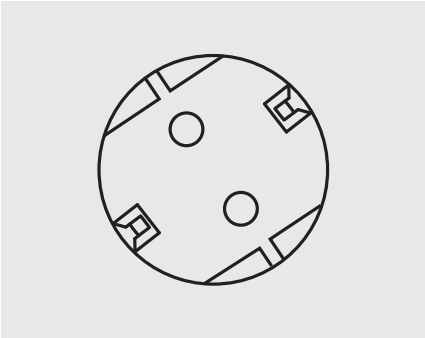

No. of sockets	Switch	Surge protection	Mains filter	Amp. meter	19" install.-compat-ible 1 U	Length L mm	Colour	Order no.
9	-	-	-	-	x	440	light grey	591-400-00
12	-	-	-	-	-	610	black	591-412-00
8	x	-	-	-	x	440	light grey	591-401-00
8	-	x	-	-	x	440	light grey	591-402-00
6	-	x	x	-	x	440	light grey	591-403-00
7	x	x	-	-	x	440	light grey	591-404-00
7	-	-	-	x	x	440	light grey	591-400-15

UTE (France), 230 VAC, 16 A

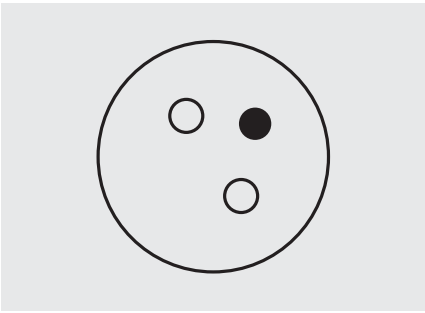

No. of sockets	Switch	Surge protection	Mains filter	Amp. meter	19" install.-compat-ible 1 U	Length L mm	Colour	Order no.
9	-	-	-	-	x	440	light grey	591-405-60
12	-	-	-	-	-	610	black	591-412-60
8	x	-	-	-	x	440	light grey	591-406-60
8	-	x	-	-	x	440	light grey	591-402-60
6	-	x	x	-	x	440	light grey	591-403-60
7	x	x	-	-	x	440	light grey	591-404-60

IEC connectors IEC-C13, 230 VAC, 10 A

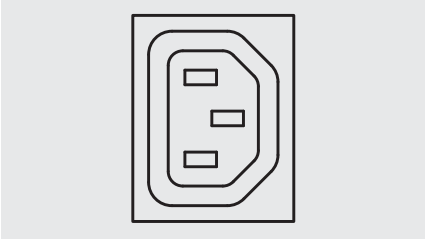

No. of sockets	Switch	Surge protection	Mains filter	Amp. meter	19" install.-compat-ible 1 U	Length L mm	Colour	Order no.
9	-	-	-	-	x	440	light grey	591-414-00
12	-	-	-	-	x	440	black	591-414-10
8	-	-	-	x	x	440	light grey	591-400-17

"Swiss earthing-pin plug" adapter

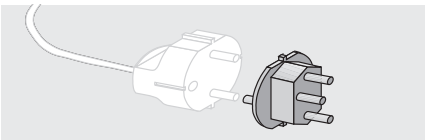

- connector pin side: Swiss
- jack side: earthing-pin plug

Material: plastic, black

Order no.
640-230-00

Additional multiple socket strips such as C-19, monitorable or switchable socket strips available on request!

Design	Input	Phases Input	Current per phase	Outputs	Measure-ment Input	Measurement per port	Switched outputs	Order no.
Horizontal (19")	400 V 16 A	3	16	3 x Earthing-pin	X			591-920-01
Vertical	230 V 16 A	1	16	18 x C13	X			591-920-02
Vertical	230 V 16 A	1	16	18 x C13	X	X		591-920-03
Vertical	230 V 16 A	1	16	18 x C13	X		X	591-920-04
Vertical	230 V 16 A	1	16	18 x C13	X	X	X	591-920-05
Horizontal (19")	230 V 16 A	1	16	4 x C13, 5 x C19	X			591-920-06
Horizontal (19")	230 V 16 A	1	16	4 x C13, 5 x C19	X	X		591-920-07
Horizontal (19")	230 V 16 A	1	16	4 x C13, 5 x C19	X		X	591-920-08
Horizontal (19")	230 V 16 A	1	16	4 x C13, 5 x C19	X	X	X	591-920-09
Vertical	230 V 32 A	1	32	4 x Earthing-pin, 12 x C13, 2 x C19	X			591-920-10
Vertical	230 V 32 A	1	32	4 x Earthing-pin, 12 x C13, 2 x C19	X	X		591-920-11
Vertical	230 V 32 A	1	32	4 x Earthing-pin, 12 x C13, 2 x C19	X		X	591-920-12
Vertical	230 V 32 A	1	32	4 x Earthing-pin, 12 x C13, 2 x C19	X	X	X	591-920-13
Vertical	400 V 16 A	3	16	3 x Earthing-pin, 18 x C13	X			591-920-14
Vertical	400 V 16 A	3	16	3 x Earthing-pin, 15 x C13	X	X		591-920-15
Vertical	400 V 16 A	3	16	3 x Earthing-pin, 15 x C13	X		X	591-920-16
Vertical	400 V 16 A	3	16	3 x Earthing-pin, 15 x C13	X	X	X	591-920-17
Vertical	400 V 16 A	3	16	1 x Earthing-pin, 8 x C19	X			591-920-18
Vertical	400 V 16 A	3	16	1 x Earthing-pin, 8 x C19	X	X		591-920-19
Vertical	400 V 16 A	3	16	1 x Earthing-pin, 8 x C19	X		X	591-920-20
Vertical	400 V 16 A	3	16	1 x Earthing-pin, 8 x C19	X	X	X	591-920-21
Vertical	400 V 16 A	3	16	3 x Earthing-pin, 3 x C19, 21 x C13	X			591-920-22
Vertical	400 V 16 A	3	16	3 x Earthing-pin, 3 x C19, 21 x C13	X	X		591-920-23
Vertical	400 V 16 A	3	16	3 x Earthing-pin, 3 x C19, 21 x C13	X		X	591-920-24
Vertical	400 V 16 A	3	16	3 x Earthing-pin, 3 x C19, 21 x C13	X	X	X	591-920-25
Vertical	400 V 32 A	3	32	3 x Earthing-pin, 24 x C13	X			591-920-26
Vertical	400 V 32 A	3	32	3 x Earthing-pin, 24 x C13	X	X		591-920-27
Vertical	400 V 32 A	3	32	3 x Earthing-pin, 24 x C13	X		X	591-920-28
Vertical	400 V 3 2A	3	32	3 x Earthing-pin, 24 x C13	X	X	X	591-920-29
Vertical	400 V 32 A	3	32	1 x Earthing-pin, 2 x C13, 15 x C19	X			591-920-30
Vertical	400 V 32 A	3	32	1 x Earthing-pin, 2 x C13, 15 x C19	X	X		591-920-31
Vertical	400 V 32 A	3	32	1 x Earthing-pin, 2 x C13, 15 x C19	X		X	591-920-32
Vertical	400 V 32 A	3	32	1 x Earthing-pin, 2 x C13, 15 x C19	X	X	X	591-920-33
Temp. sensor								591-920-34

Other configurations e.g. with differential current measurement available on request!

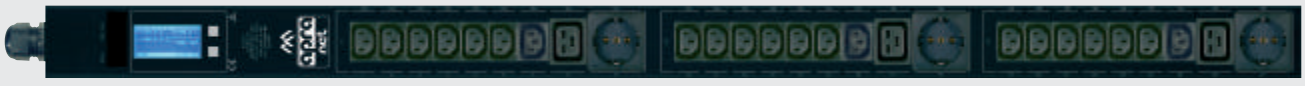

www.apra.de

RZ-flex PDU

This modular system makes it possible to connect different PDU modules and change them during operation by means of a very sturdy and safe coupling device (Neutrik single phase/ 16 A). Its supply line can be connected simply and quick. Thus, an individual configuration on site afterwards is possible.

- individual connection of PDU by standard Neutrik system (single phase/ 16 A).
- type of modules C13, C19 and earthing-pin plug
- assembly: 19" mounting (see fig. 1) or individual mounting to rack (see fig. 2)

Material:
high-quality aluminium extrusion

Dimensions (H x W x D):
44,45 (1 U) x 440 x 47 mm

Delivery:
mounting material included

1


2


3


4


5


6


www.apra.de

19" Assembly



Mounting on the cabinet frame

Order information

Pos.	Description	Power Inputs	Order no.
1	6 times C13	1x	591-400-62
2	4 times C19 with IEC LOCK	1x	591-400-63
3	6 times Earthing-pin	1x	591-400-87
4	6 times C19 with IEC LOCK	3x	591-400-90
5	12 times C13	2x	591-401-37
6	8 times C19 with IEC LOCK	2x	591-401-38

Accessories

Description	Order no.
Neutrik coupling 16 A for cable mounting	640-024-17
Locking set for C13 PDU (set for 6 locks)	591-400-61
Mains cable 3m, with Neutrik socket u. CEE plug 16 A 3pol.	640-044-30
Mains cable 5m, with Neutrik socket u. CEE plug 16 A 3pol.	640-044-50

Installation: Individual connection of the PDU via standard Neutrik system (single-phase / 16 A)







apra power system network-enabled PDUs

Professional high-quality multiple socket strips
The strips measure electrical parameters and the on/off switching of the individual outputs via an integrated ethernet connection.

Material:
aluminium
Dimensions (H x W x D):
44.4 (1U) × 438 × 130 mm
Delivery text
PDU, 19" mounting bracket, supply line: 3 metre H05VV-F 3G2,5 mm^2 with Earthing-pin plug 16A



Switchable metered PDU

Individually switchable sockets with switching in the zero passage and additional switching status control. The PDU has an integrated ethernet connection and can therefore be easily operated via a web browser.

The following protocols are supported, amongst others: HTTP, HTTPS, SNMP, SMTP, NTP, SSH, SNMP V2 und V3, Modbus TCP, IPv4 und IPv6

Description	Order no.
8-way IEC 320 C13	591-920-41



Example with 19" mounting bracket

Technical changes and errors reserved. Pictures may be different from the product

www.apra.de

Monitored PDU

Integrated measurement of: power, active power, voltage, frequency, cos φ (Zeichen Phi: Arial Unicode 03C6) and energy.
All values can be read on the integrated, illuminated OLED display. The PDU has an integrated ethernet connection and can therefore be easily operated via a web browser.
The following protocols are supported, amongst others: HTTP, HTTPS, SNMP, SMTP, NTP, SSH, SNMP V2 und V3, Modbus TCP, IPv4 und IPv6



Description	Order no.
8-way Earthing-pin	591-920-42
8-way IEC 320 C13	591-920-43

Retrofit module for existing systems

In order to also exploit all the benefits of a monitored power distribution on existing racks, the retrofit module offers the option of integrating an intelligent component into an existing system. The installation work and costs are greatly minimised by the pluggable system.
Integrated measurement of: power, active power, voltage, frequency, cos φ (Zeichen Phi: Arial Unicode 03C6) and energy.
All values can be read on the integrated, illuminated OLED display.
The PDU has an integrated ethernet connection and can therefore be easily operated via a web browser.
The following protocols are supported, amongst others: HTTP, HTTPS, SNMP, SMTP, NTP, SSH, SNMP V2 und V3, Modbus TCP, IPv4 und IPv6



Description	Type of connection	Order no.
400 V / 16 A	CEE plug-socket	591-920-47
400 V / 32 A	Input and Output terminal	591-920-48

Further models available on request!

Technical changes and errors reserved. Pictures may be different from the product

www.apra.de

Configure “Your“ individual PDU

Through cooperation with several well-known manufacturers, we can provide you with PDUs that are optimally tailored to your needs.

Contact us - we will be happy to advise you!





Power supply

- 230 / 400 VAC
- Single- / Three-phase
- 16 A / 32 A
- Positioning (Top/Bottom/Front/rear)

Fuses

- Circuit breaker
- Termal fuse
- Overvoltage Protection



Cable

- Individual length
- Different plug types
- Terminal block
- Halogen-free
- Larger cross-section



www.apra.de

Enclosure / housing

- dimensions
- 1 U / 1,5 U
- individual length according to equipment
- Horizontal or vertical alignment
- color
- Individual labelling possible



Connection types

- IEC320 C13
- IEC320 C19 IEC-lock
- CEE 7/3 (Earthing-pin)



Monitoring / Measuring

a) Local measuring
- Current in A

b) Telemetering
- Current in A
- Consumption in W and VA
- Energy in kWh
- Voltage in V
- Effective power

c) Different current measurement
- Class B measurement (alternating current / direct current)
- Single & three-phase

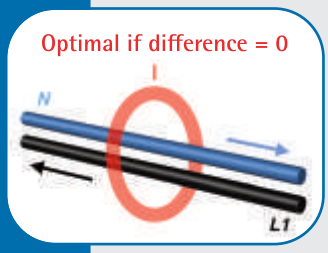

Output features

- Energy metering
  - PDU total
  - Groups
  - Per output
- Remote output switching by means of bistable relays per output

www.apra.de

19" power distribution units 3 U, redundant

This power distribution system is ideal for the safe supply of power to servers with redundant power supply units.
It enables two separate power supplies (each 400 V / 3 × 25 A) to be fed in. The supplies are distributed over 6 outputs (each 2 × 230 V / 10 A) and each output is protected with a B10 A automatic circuit breaker. Clear colour identification of the outputs and automatic circuit breakers divides the device into six lines and enables a redundant supply to six servers from a single point.
The mains supply lines are connected easily with a connector included in the scope of delivery without any additional tools or material costs via clamp spring contacts and are inserted and locked at one of the two inputs.
Various conductor types with various crosssections (0.5 to 4 mm^2) can be connected here.
At the outputs, power can also be picked up by lockable C14 IEC connectors or by connectors included in the scope of delivery (design similar to power input connector).

Advantages:

- redundant power supply to 6 servers with just one device
- only 3 U space required thanks to compact design
- simple power feed via cables to up 5 × 4 mm^2 max. 3 × 25 A
- simple connection of servers either via either IEC sockets or with the connector system included in the scope of delivery
- fuse protection of the outputs each with a B10 A automatic circuit breaker

Material:
enclosure: aluminium
inserts: plastic
Finish:
anodised
Dimensions (H x W x D):
3 U (132.5 mm) x 482.6 mm x 170 mm



Order no.
591-910-10

www.apra.de

19" power distribution unit 3 U for automatic circuit breakers

- for the installation of automatic circuit breakers
- fast access to the wiring space
- stable accommodation of components acc. to DIN 43 880 in build sizes 1-3
- strain relief of the rear-side cable via cable guard rail

Material:
side panels: aluminium 2.5 mm
module rail: aluminium profile
front bracket: aluminium profile
Finish:
transparent, chromated
Delivery:
assembly set

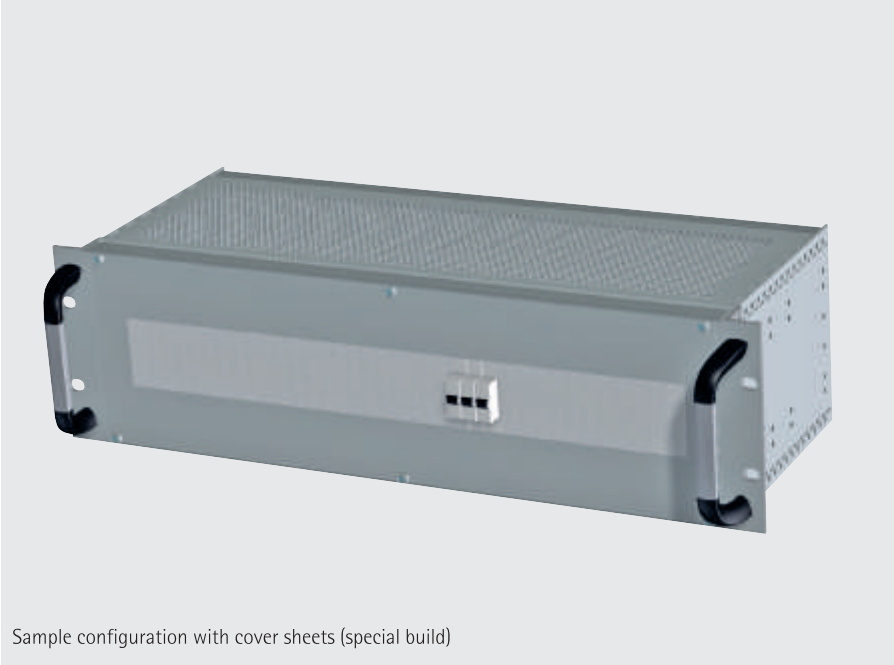

Sample configuration with cover sheets (special build)

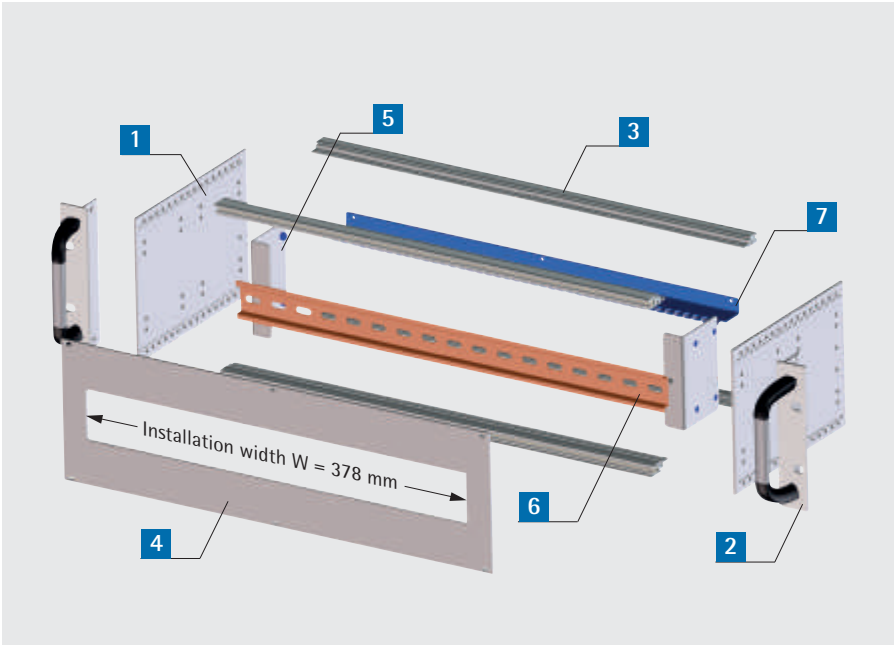

Delivery

Pos.	St.	Bezeichnung
1	2	Side panels
2	2	Front bracket with handles
3	4	Modul rails en (2x standard, 2x BUS)
4	1	Front panel
5	2	Angle bracket
6	1	Top hat rail TS 35
7	1	Cable guard rail
8	1	Mounting hardware

Order no.
245-311-80

Accessories

Cover plate closed

- for top and bottom mounting

Material:
aluminium

Order no.
240-662-85

Cover strip S 35 G

- to conceal the front panel openings
- L: 219 mm

Material:
plastic

Order no.
640-222-00

19" Line Interactive VFI-SS-311 1000, 1500, 2000, 3000 VA

The Racktower housing and the rotatable LCD display make it possible to use it as a tower unit as well as in 19" cabinets.
The series comes standard with RS-232, USB and emergency shutdown contacts. Through the card slot, it can be added with an optional SNMP adapter or a relay card. All models provide at least 8 IEC C13 (10 A) consumer outputs.
The 3000 VA model also provides a 16 amp IEC C19 output.

- UPS classification VFI-SS-311 according to IEC 62040-3
- "Line interactive" technology
- excellent power factor of 0.9
- high efficiency (> 97%)
- can be used as a tower as well as 19 "version
- user-friendly backlit LCD display depending on operating status
- optional XL version with expandable batteries
- large voltage input window (161-276 VAC)
- automatic frequency detection
- sine wave output
- RS-232 and USB interface as standard
- slot for optional adapters: relay card or SNMP card
- management software for all common operating systems
- 36 months warranty



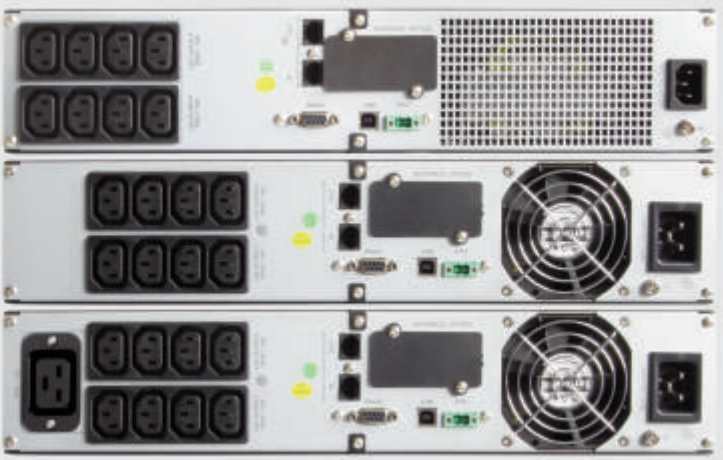

top: Rear side APS 1000 / 1500 LI
middle: Rear side APS 2000 LI
bottom: Rear side APS 3000 LI

Technical changes and errors reserved. Pictures may be different from the product



	APS 1000 LI	APS 1500 LI	APS 2000 LI	APS 3000 LI
Power VA / Watt	1000 / 900	1500 / 1350	2000 / 1800	3000 / 2700
Power failure bridging time Load 100% / 50%	4,5 min / 10 min	3 min / 7 min	4,5 min / 10 min	3 min / 7 min
Input				
- Nominal voltage / voltage range	230 VAC / 161 ~ 276 VAC			
- Input frequency range	50/60 Hz normal operation / 40-70 Hz generator operation			
- Boost threshold	207 VAC ± 4 % / 215 VAC ± 4 % (setup 230 VAC Wide Range)			
- Undervoltage threshold	161 VAC ± 4 % / 171 VAC ± 4 % (setup 230 VAC Wide Range)			
- Voltage return threshold	243 VAC ± 4 % / 236 VAC ± 4 % (setup 230 VAC Wide Range)			
- Overvoltage threshold	276 VAC ± 4 % / 266 VAC ± 4 % (setup 230 VAC Wide Range)			
Output				
- Output voltage	220, 230, 240 VAC			
- Voltage tolerance (Battery Mode)	± 5 % RMS			
- THD(i) typical linear/non-linear load	< 3 % THD / < 6 % THD			
- Frequency tolerance synchronization range	45-55 Hz / 55-65 Hz			
- Frequency tolerance Battery Mode	50 / 60 ± 0,1 Hz			
- Power factor	0,9			
- Voltage waveform	sinusoidal			
- Efficiency	> 97 % (normal operation, loaded batteries))			
DC Start	cold start			
Switch time	typical, 2 ~ 6 ms			
Batteries				
- Nominal voltage	36 VDC		72 VDC	
- Type	closed, maintenance-free lead-mat battery			
- Charging time	approx. 3 h auf 90 %			
Display				
- LCD	rotary LCD display			
- LCD backlight	Normal (blue) / Fault (red)			
Interface	RS232, USB, EPO, Card slot for optional SNMP / relay card			
Audible alarm				
- Battery mode / Battery Low	Beeping every 4 seconds / Beeping every second			
- USV fault / overloadt	Beep continuously / Beeping every second			
Environment				
- Temperature	0 °C - 40 °C			
- Humidity	0-95% non-condensing			
- Acoustic noise	< 50 dB(A) @ 1 Meter			
Mechanic				
- Dimensions (H x W x D in mm)	86,5 (2 HE) x 438 (19") x 430		86,5 (2 HE) x 438 (19") x 600	
- Weight	16 kg		29,5 kg	
- Degree of protection	IP 20			
Terminals				
- Input	1 x IEC (10 A)		1 x IEC (16A)	
- Output	8 x IEC C13 (10A)			8x IEC C13 (10 A) + 1x IEC C19 (16 A)
Regulations / standards	CE / EN 62040-1 / EMC: EN 62040-2 class C1			
Order no.	235-300-02	235-300-03	235-300-04	235-300-05

19" online continuous transducer VFI-SS-3111 1000, 1500, 2000, 3000 VA

High-end UPS in the field of high-quality microprocessor-controlled online permanent converters for your EDP landscape or for metrological or industrial plants. The Racktower UPS is already equipped as standard with extensive and special features, which otherwise offer on the UPS market at most expensive special designs. The programmable switch contacts or the adjustable restart function are only two of the countless examples. Their racktower housing and the rotatable LCD display allow both use as a tower unit as well as the installation in 19" cabinets.
With standard RS232 and USB interface, standard emergency stop contact (EPO) and individually programmable switch contacts (DRY IN / DRY OUT), the Racktower UPS offers comprehensive communication and control options. And even these can be extended by additional optional slot adapters (SNMP, relay card). All models provide at least 8 IEC C13 (10 A) consumer outputs.

- UPS classification VFI-SS-111 according to IEC 62040-3
- online permanent converter with sine output switchable to ECO mode (line-interactive)
- excellent power factor of 0.9
- can be used as a tower as well as 19 "version
- user-friendly rotatable LCD display
- optional XL version with expandable batteries
- large voltage input window (120-276 VAC
- microprocessor control
- automatic frequency detection
- preset output frequency (frequency converter function)
- RS-232 as standard
- USB as standard
- programmable switch contacts as standard
- emergency stop contact "EPO" as standard
- slot for further optional adapters: relay card or SNMP
- management software for all common operating systems
- 36 months warranty





top: Rear side APS 1000 - 2000 OD
bottom: Rear side APS 3000 OD

Technical changes and errors reserved. Pictures may be different from the product



	APS 1000 OD	APS 1500 OD	APS 2000 OD	APS 3000 OD
Power VA / Watt	1000 / 900	1500 / 1350	2000 / 1800	3000 / 2700
Power failure bridging time 100% / 50 % load (pf0,7)	7 min / 15 min	5 min / 15 min	5 min / 15 min	7 min / 20 min
Input				
- Cold start	yes, preset frequency = 50 Hz			
- Acceptable voltage range	120 VAC - 276 VAC			
- THDi	< 5 % full load			
- Input Power Factor	≥ 0,99 (Full RCD LOAD)			
- Input frequency range	45 - 55 Hz / 54 - 66 Hz			
Output				
- Output voltage				
- Voltage waveform	Sinus			
- Nominal voltage	208 VAC / 220 VAC / 230 VAC / 240 VAC / ± 1 %			
- Transient recovery	100 ms (IEC 62040-3 non-linear load			
- Distortion factor	< 2% THD, linear load / < 5 % THD, non-linear load			
- Output frequency				
- Synchronization range	45 - 55 Hz / 54 - 66 Hz (adjustable)			
- Battery operation	50 / 60 ± 0,2 Hz			
Power Factor	0,9			
Efficiency at full load				
- Line mode	> 89 % with loaded batteries			
- Battery mode	> 84 % @ 12 VDC / Battery			
- ECO mode	> 95 %			
Overload (Normal/Battery)	102 % ~ 130 % : 12s / 130 % ~ 150 % : 1,5s / > 150 % :100 ms			
Battery				
- Battery type	12 VDC / 7 Ah (closed, maintenance-free lead-mat battery)		12 VDC / 9 Ah (closed, maintenance-free lead-mat battery)	
- Number of blocks	3	4	4	6
- DC voltage	36 VDC	48 VDC	48 VDC	72 VDC
- Charging time	< 3 h for 90%			
- Maximum charge current	1,5 A			
Communication integrated / Optional cards	RS 232, USB, switch contacts, EPO / Intelligent Slot for AS 400, SNMP			
Indicator / Alarm	rotary LCD display / acoustic alarm			
Ambient conditions				
- Temperature (operating)	0 °C - 40 °C			
- Humidity	0-95% non-condensing			
- Noise level	ca. 52 dB(A) @ 1 Meter			
Mechanical				
- Dimensions (H x W x D in mm)	(2 HE) x (19") x 435			(2 HE) x (19") x 604
- Weight	13,2 kg	19,7 kg	19,7 kg	27,8 kg
- Degree of protection	IP 20			
Connection input	1 x IEC (10 A)			1 x IEC (16 A)
Connection output	8 x IEC 13 (10 A)			8 x IEC 13 (10 A) + 1 x IEC 19 (16 A)
Standards	CE / EN 62040-1 / EMV: EN 62040-2 Klasse C1			
Order no.	235-300-07	235-300-08	235-300-09	235-300-10

www.apra.de

Guarantee success with a unique combination of our indivudual products!

Contact us and we will be happy to advise you.




19" TiRAX cabinet system from page 11


19" NETcell cabinet system from page 65


Open 19" racks from page 83


19" floor-standing / wall-mounted enclosure VARi IT from page 97


Wall-mounting enclosure systems from page 111


Air conditioning technology from page 129

Power distribution system from page 137

Cabinet monitoring from page 155

Cable management from page 163

Distribution technology from page 169


General accessories / distribution technology from page 177



You can read more about products from the apra-group at www.apra-norm.com

www.apra.de

EMI-One

EMI-One system is a complex solution integrating the functionality of monitoring of environmental parameters with access control. The extensive alarm section and rules, combined with a wide range of accessories and sensors, fully tailor to your needs.

Basic features:

- communication using Ethernet (100Base-TX)
- 4 independent 12-V output channels for controlling terminal devices (e.g. a handle with an electromagnetic door strike, lighting, or ventilation system)
- 4 independent binary inputs with additional parametrisation function to handle fire, gas, flood, motion, power failure sensors etc.
- possibility to connect temperature sensors, or a temperature and a humidity sensor (e.g. for measurement in different places of the cabinet)
- control functions access – RFID readers (cards, key rings, etc.)



Order no.
925-300-00

Touchscreen-Display 4,3"

- Enables the display of environmental parameters in the cabinet
- User authentication via PIN code entry on the touch screen
- Screen diagonal: 4.3 "
- Resolution: 480 x 272 px
- Communication interface: RS485
- Data update rate: 5 seconds
- Power supply: 12 V DC (from the EMI-One system)
- Power consumption: 100 mA
- Connection via JST 4-pole socket
- Operating temperature: -10° C to +60° C
- Dimensions: 141 x 90 x 15 mm
- Standard cable length: 2.5 m

Material: plastic, black
(other colours on request)



Order no.
925-454-00

Subject to technical modification. Picture can differ from actual product.

Temperature sensor



- temperature range: -55°C to +125°C
- dimensions: 53 x Ø 8 mm
- cable length 2,5 m

Order no.
925-360-00

Combo sensor (temperature + humidity)



- Measures both the humidity and the temperature of the environment
- Humidity range: 0-99.9% relative humidity - Accuracy ± 3% (10 to 90%)
- Temperature range: -40 ° C to 80 ° C - Accuracy ± 1 ° C (-40 ° C to 80 ° C)
- Dimensions: 60 x 28 x 4 mm
- Standard cable length 2,5 m

Order no.
925-361-00

Combo sensor (temperature + humidity), high precision



- Measures both the humidity and the temperature of the environment
- Humidity range: 0-100% relative humidity - Accuracy: ± 1.5% (0 to 80%)
- Temperature range: -40 ° C to 125 ° C - Accuracy: ± 0.1 ° C (20 ° C to 60 ° C)
- Dimensions: 25 x 44 x 37 mm
- Standard cable length 2.5 m with removable RJ10 / RJ11 plug

Order no.
925-374-00

Fire detector



- Operating mode selectable (smoke, heat, multi-sensor). Smoke detection according to the requirements of EN 54-7
- Heat detection according to EN 54-5
- Standard cable length 2,5 m

Order no.
925-368-00

Flood sensor



- The sensor may e.g. be placed in condensate tubs of air conditioners
- Parallel connection of several sensors possible
- Probes adjustable up to max. 35 mm
- Standard cable length 2,5 m

Order no.
925-369-00

Door contact switch



- Condition of doors can be monitored.
- Change of state at distances greater than 20 mm.
- With sabotage monitoring
- Standard cable length 2.5 m

Order no.
925-364-00

Subject to technical modification. Picture can differ from actual product.

www.apra.de

Distributor



- Distributor for the simultaneous connection of two RFID readers and a temperature sensor
- Standard cable length 0.5 m

double	triple
925-366-00	925-394-00

Relay 12 V



- The relay allows control of higher voltage devices (such as fans or bulbs).
- Coil voltage: 12 VAC, 12 VDC
- Switching voltage: max. 250 VAC
- Operating current: max. 16 A
- Standard cable length 2.5 m

Order no.
925-363-00

Motion detector



- Digital passive infrared motion detector
- Detection range: up to 18 m
- LED to signal the alarm
- Sabotage protection before opening the housing
- Standard cable length 2.5 m

Order no.
925-402-00

Magnetic closure



- Universal lock for any cabinet or enclosure
- built-in contact signals the opening status of the door
- 12V DC / 300 mA
- holding force: 180 kg
- relay and power supply included
- without mounting material
- standard cable length 2.5 m

Order no.
925-411-00

Shelf for 19" installation

- The shelf can be pre-configured with components from the EMI One series on request.

Material:
Sheet steel
Surface:
RAL 7035 lightgrey
Load capacity:
15 kg (Area load static)
Dimensions (H x W x D):
1 U (44 mm) x 19" (482,6 mm) x 350 mm
Delivery:
unequipped, with mounting material

Order no.
317-990-08



Figure shows an example of a preconfigured shelf

Subject to technical modification. Picture can differ from actual product.

RFID reader 125 kHz

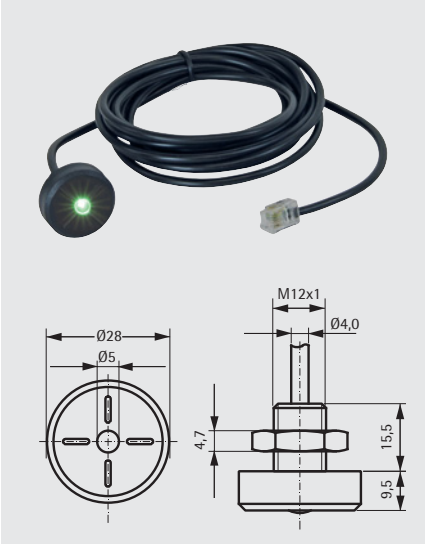

- cable length 2,5 m

RFID reader 125 kHz
925-362-00

Card, printable (1 piece)
925-382-00

RFID reader 13,56 MHz

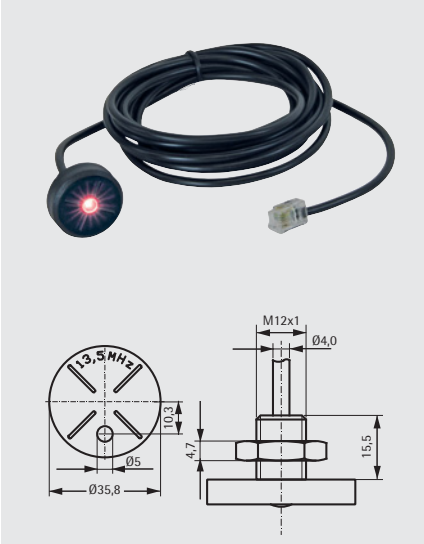

- cable length 2,5 m

RFID reader 13,56 kHz
925-370-00

Card, printable (1 piece)
925-384-00

RFID reader HID HITAG 125 kHz



- cable length 2,5 m

black	grey
925-375-00	925-399-00

Card, printable (1 piece)
925-397-00

GSM Module

Allows the sending of SMS and e-mail messages (SMTP SSL). By using the GSM module, the user has the additional assurance that he will receive the information immediately after an error has occurred.

Version 1: Local

- GSM module local will be connected directly to the EMI-One. This module sends SMS and e-mails from an EMI device
- Power is supplied by EMI-One
- Standard cable length 1.0 m
- Standard cable length of the GSM antenna 3.0 m

Version 2: Network

- GSM network gateway has the same functionality as version 1
- is additionally connected via Ethernet and can support multiple EMI devices (in the same LAN)



Order no. (Version 1)	Order no. (Version 2)
925-372-00	925-416-00

Subject to technical modification. Picture can differ from actual product.

www.apra.de

EMI-Lock Electronic handle solution

- Remote opening control for a user on site via our monitoring unit "EMI-One" or other external systems
- If the handle is not operated, it will close again automatically.
- Transmission of the opening status to the system via a reed contact
- Key cylinder for emergency opening e.g. in case of power failure (lock configurable)
- 6 versions with different Functionalities available
- Upgrade of the handle to a higher quality version is possible without changing the handle
- compatible with the most common mounting apertures for swivel levers: 150 x 25 and 200 x 25 mm
- 1-point/ or 3-point locking system possible
- built-in optical opening sensor for high reliability
- Opening system with servomechanism instead of a coil to reduce electromagnetic interference
- Multiple lock code configuration - single, group, master key
- Electronic access via RFID systems or displays
- Standard cable length: 3 m



Version 1	Version 2	Version 3	Version 4	Version 5	Version 6
	Control by means of over-EMI-One monitoring unit or other external systems		Control system stand-alone		
mechanical	Elektronic-system	Elektronic-system + RFID-reader	Elektronic system + RFID-reader	Elektronic system + Display	Elektronic system + RFID reader + Display
Passive handle	Module for electronic control system with servo-mechanism	additional RFID card reader (possible standards: **3.1** Mifare **3.2** Unique **2.3** HID)	Independent handle with RFID card reader (possible standards: **4.1** Mifare **4.2** Unique **4.3** HID)	Self-set: 2 electronic handles + display	Self-set: 2 handles with RFID card reader (possible standards: **6.1** Mifare **6.2** Unique **6.3** HID) + Display

Var.	Function	Control system	Description	Order no.
1	mechanical	mechanical	Passive handle	925-463-00
2	electronically	Control by means of Monitoring unit EMI-One or other external systems	Electronic control module with servo mechanism	925-464-00
3.1	electronically		additional RFID card reader Mifare	925-465-00
3.2	electronically		additional RFID card reader Unique	925-466-00
3.3	electronically		additional RFID card reader HID	925-467-00
4.1	electronically	Control: Stand-alone	independent handle with RFID card reader Mifare*	925-468-00
4.2	electronically		independent handle with RFID card reader Unique*	925-469-00
4.3	electronically		independent handle with RFID card reader HID*	925-470-00
5	electronically		independent set: 2 electronic handles + display	925-471-00
6.1	electronically		independent set: 2 handles with RFID card reader Mifare* + display	925-472-00
6.2	electronically		independent set: 2 handles with RFID card reader Unique* + display	925-473-00
6.3	electronically		independent set: 2 handles with RFID card reader HID* + display	925-474-00
EMI-Lock 1-point bar lock				925-480-00
EMI-Lock 3-point bar lock for cabinet height 42/46 U				925-267-01

* (Only the enclosed power supply unit is required for operation) - Subject to technical changes and errors. Illustrations may differ from the product.

19"-Fire extinguishing system

The cabinet extinguishing system can be easily and space-savingly integrated in commercially available, closed 19 "cabinets up to a cabinet volume of 1.2 m^3. Larger cabinets or related cabinet units can be equipped with max. 4 slave units (1.2 m^3 per slave) can be realized.

Convincing product features:

- Space-saving 19 "format with only 2 height units (per master / slave)
- Quick detection by early fire detection inside the 19 "cabinet
- Fast extinguishing by applying the effective quenching gas FM-200 in the cabinet
- Easy installation and commissioning through pre-assembled components
- Easy maintenance due to modular design
- Fast and reliable detection of events through detailed LED displays
- Secure protection even from large cabinets through the use of slave units

Scope of delivery Master slot:

- Insert 2 HE
- The transfer distribution
- extinguishing fan
- Door contact switch (1x)
- For each additional door you need an additional door contact switch



Master



Fig. does not correspond to the standard scope of delivery

Description	Order no.
master slot	235-110-00
slave slot	235-110-05
connection cable (slave)	235-110-07
door contact switch	235-110-06
sliding rail*	316-544-20

* We recommend that you attach a set of slide rails per slot because of the weight of the slots.

Commissioning of the extinguishing system is not included in the scope of delivery and must be carried out on site by qualified personnel! We are pleased to offer you commissioning on request.

Technical data	Master	Slave
Input voltage	230 VAC	
Output voltage	24 VDC, for external control purposes as well as horn and extinguishing fan	
Battery	2 Ah (sufficient for 4 hours)	
Monitored inputs and outputs	for mains, smoke detector 1 and 2, manual release, door contact switch, Extinguishing fan, horn, ext. control	
Potential-free relay outputs	for pre-alarm, main alarm, collective fault and object shutdown (loadable 30 VA)	
displays	mains, CPU, collective fault, smoke detector 1 & 2, manual release, extinguishing agent tank (pressure switch), extinguishing fan, horn, triggering element, pre-alarm, main alarm, extinguishing triggered	
smoke detectors	2 optical scattered light detectors in dual detector dependency	
extinguishing agents	FM-200, C3F7 H/N2 (25 bar) / alternatively Novec 1230	
extinguishing agent container	1 litre for max. 1.2 m^3 protective volume approved according to RL 97/23/EG and RL 1999/36/EG	
Temperature range	0 °C to 40 °C	
Width / Height	19" / 2 U	
Mounting depth	403,25 mm	265 mm
Weight	ca. 14 kg	ca. 8 kg


19" TiRAX cabinet system from page 11


19" NETcell cabinet system from page 65


Open 19" racks from page 83


19" floor-standing / wall-mounted enclosure VARi IT from page 97


Wall-mounting enclosure systems from page 111


Air conditioning technology from page 129


Power distribution system from page 137

Cabinet monitoring from page 155



Cable management from page 163

Distribution technology from page 169

General accessories / distribution technology from page 177

You can read more about products from the apra-group at www.apra-norm.com

19" cable guide panel 1 U / 2 U with metal hoops

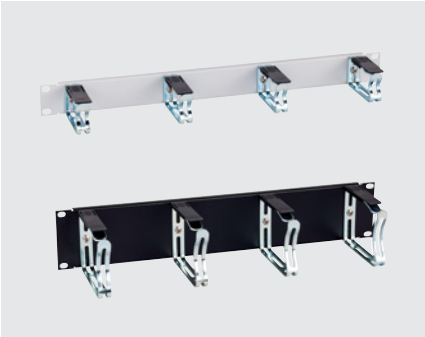

- for clear and neat horizontal cable routing in the 19" level
- incl. 4 cable hoops with movable plastic locks

Material:
panel: sheet steel 1.5 mm
cable hoops: sheet steel, chrome-plated
locks: Lexan 920 black, UL94 V-0, RoHS compliant
Finish:
painted / chrome-plated
RAL 7035 light grey
RAL 9005 jet black
Dimensions (H x W x D):
44 / 88 x 482,6 x 90 / 130 mm
Delivery:
mounting material included

U	Colour	Order no.
1	RAL 7035	213-145-41
1	RAL 9005	213-145-42
2	RAL 7035	213-145-43
2	RAL 9005	213-145-44

19" cable routing panel with plastic clamps 1 U

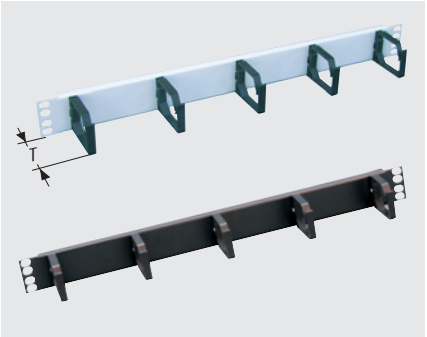

- for clear and neat horizontal cable routing in the 19" level
- clips: Version, narrow

Material:
sheet metal / plastic UL94 HB
Finish:
RAL 7035 light grey
RAL 9005 jet black
Dimensions (H x W x D):
44 x 482.6 x 60 mm
Delivery:
mounting material included

Colour	Order no.
RAL 7035	213-145-00
RAL 9005	213-145-30

19" switch panel, plastic 1 U



- for clear and neat horizontal cable routing in the 19" level
- weight-saving in comparison to traditional metal panels
- fire protection classification to UL94 V-0

Material:
plastic (polyamide) UL94 V-0
Finish:
black (similar to RAL 9005)
Dimensions (H x W x D):
44 x 482.6 x 65 mm
Delivery:
complete with mounting materials

Order no.
213-145-80

www.apra.de

19" cable routing panel 1 U with Velcro fasteners

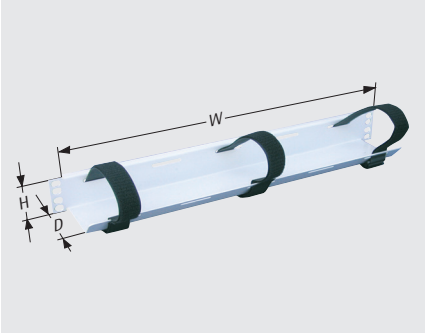

- for clear and neat horizontal cable routing in the 19" level with Velcro fastener

Material:
sheet metal / plastic
Finish:
RAL 7035 light grey
RAL 9005 jet black
Dimensions (H x W x D):
44 x 482.6 x 90 mm
Delivery:
complete with 3 × Velcro strip and mounting material

Colour	Order no.
RAL 7035	213-161-00
RAL 9005	213-161-10

19" cable manager 2 U / 3 U



- structured, horizontal cable routing in the 19" plane area
- stable front plastic cable fingers
- lockable on the front side by pivoting hinged cover (in both directions)
- increased operational safety
- flexible use in all 19" cabinet and enclosure systems

Material:
Flange: sheet steel
Folding panel: aluminum
Cable fingers and hinges:
Plastic black, UL94 - V0
Finish:
Sheets: RAL 7035 light gray resp.
RAL 9005 deep black
Dimensions (H x W x D):
44 / 88 x 482,6 x 100 mm / 150 mm
Delivery:
1 piece, incl. 19" attachment set

U	Colour	Order no. D 100 mm	Order no. D 150 mm
2	RAL 7035	213-146-55	213-146-30
2	RAL 9005	213-146-56	213-146-35
3	RAL 7035	213-146-57	213-146-40
3	RAL 9005	213-146-58	213-146-45

19" cable guide panel 2 U



- for orderly and clear horizontal cable routing in the 19" level
- extendable legs up to W = 720 mm

Material:
sheet metal
Finish:
RAL 7035 light grey
RAL 9005 jet black
Dimensions (H x W x D):
88 x 482,6 x 85 mm, W = extractible
Delivery:
mounting material included

Colour	Order no.
RAL 7035	213-145-62
RAL 9005	213-145-71

Cable clips, metal (set)

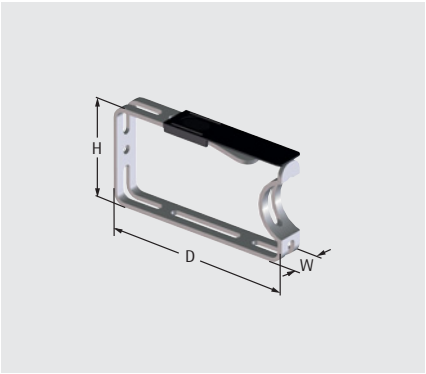

- for securing cables vertically to a 19" frame (for 800 mm wide cabinets)
- set = 10 pieces
- mounting material included

Material:
metal, plastic black UL94 V-0

Dimensions (H x W x D) mm	Order no.
44 x 23 x 85	640-036-11
66 x 23 x 125	640-036-12
88 x 23 x 125	640-036-13

Switch panel metal, small

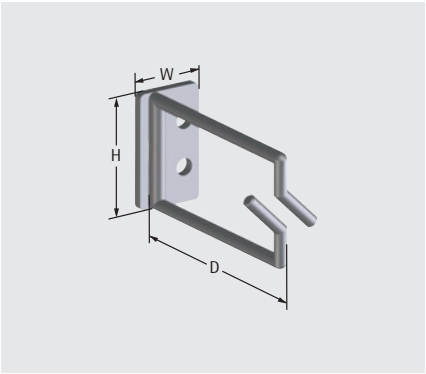

- screwable (M 5)
- Set = 10 pieces, mounting material included

Material:
metal, galvanised
Dimensions (H x W x D):
35 x 20 x 65 mm

Order no.
640-036-10

Cable holder 2 U

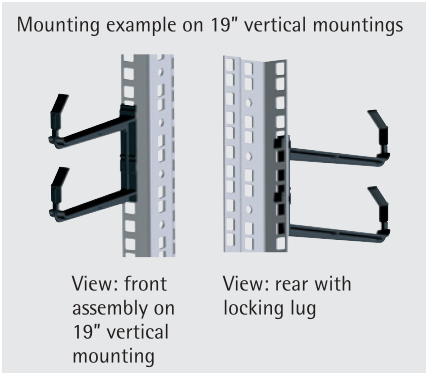

- attachable in square holes (9.5 mm), fixable with screw (M 5)
- set = 10 pieces
- mounting material included

Material:
plastic, black UL94 V-0
Dimensions (H x W x D):
114,2 x 15,1 x 127,5 mm

Order no.
640-030-35

Cable diverter / radius limiter for FO and Cu cables

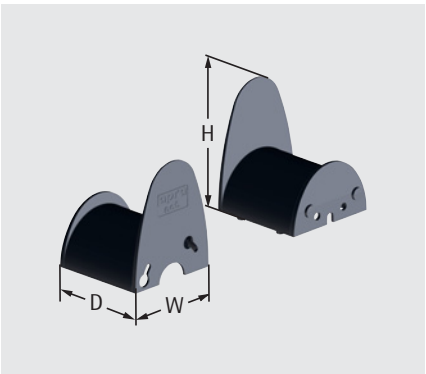

- latchable in shaped hole, additionally screwable (M 5)
- set = 10 pieces

Material:
Plastic, black UL94 V-0
Dimensions (H x W x D):
85 x 70 x 70 mm, R = 35 mm

Order no.
640-030-55

Cable diverter / radius limiter for FO and Cu cables

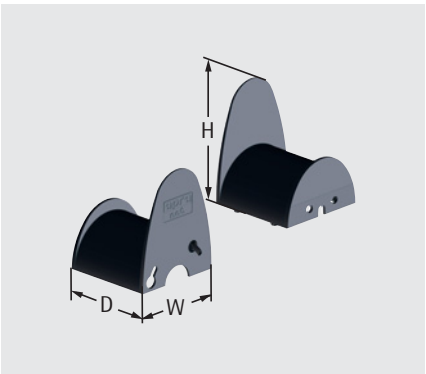

- screwable (M 5)
- set = 10 pieces

Material:
Plastic, black UL94 V-0
Dimensions (H x W x D):
85 x 70 x 70 mm, R = 35 mm

Order no.
640-030-65

Closure for cable diverter / radius limiter



- insertable
- Ø 69 mm
- set = 10 pieces

Material:
Plastic, black UL94 V-0

Order no.
640-030-52

www.apra.de

"Universal" cable guard rail

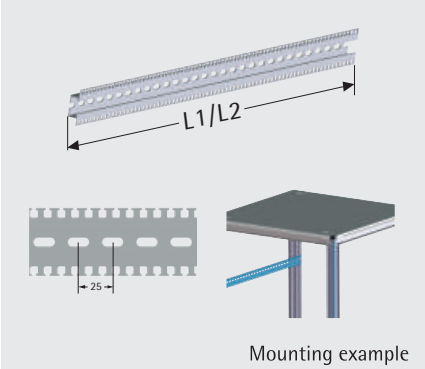

Mounting example

- with integrated cable management bracket
- holds cable ties and cable clips in place
- mounting material included

Material:
aluminium, anodised

Model	Depth (D) / Width (W)	Order no.
L1 (520 mm)	600 mm	318-121-10
L2 (720 mm)	800 mm	318-121-11
Adapter for 1000 mm		316-103-25

Cable clamps

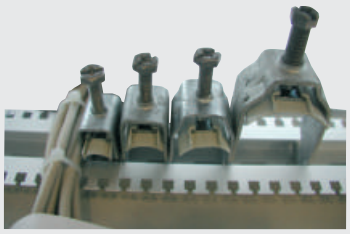

- to mount cables on the "Universal" cable guard rail

Description	Order no.
for cableØ 8 - 12 mm	640-132
for cable Ø 12 - 16 mm	640-133
for cable Ø 16 - 22 mm	640-134
for cable Ø 28 - 34 mm	640-134-10

"Easyfix" cable holder

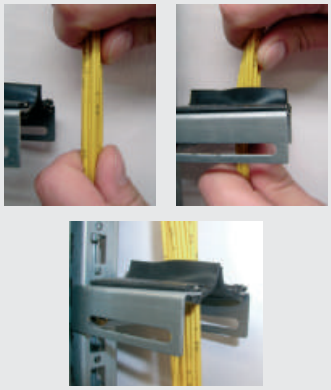

- quick, clear and protective holders for vertical cabling in the rack
- preferred application for fibre optic cables

Order no.
640-036-15

"Universal" velcro strip



- for quickly securing **non 19"-compatible** components
- length: 300 mm, width: 20 mm
- back to back mounting
- set = 10 pieces

Material:
velcro, black

Order no.
671-122-08

Velcro mount "universal"



- used to accommodate velcro up to w = 20 mm
- for screws M 4 (not included)
- set = 10 pieces

Material:
plastic, black UL94 V-0
Dimensions (H x W x D):
29 x 29 x 9 mm

Order no.
583-001-08

19" cable duct 1 U with brush



- for cable access behind the 19" mounting
- mounting to 19" level

Material:
sheet metal / plastic
Finish:
RAL 7035 light grey
RAL 9005 jet black
Dimensions (H x W x D):
44 x 482.6 x 12 mm
Delivery:
complete with brush and mounting material

Colour	Order no.
RAL 7035	213-146-00
RAL 9005	213-146-10

Grid gutter

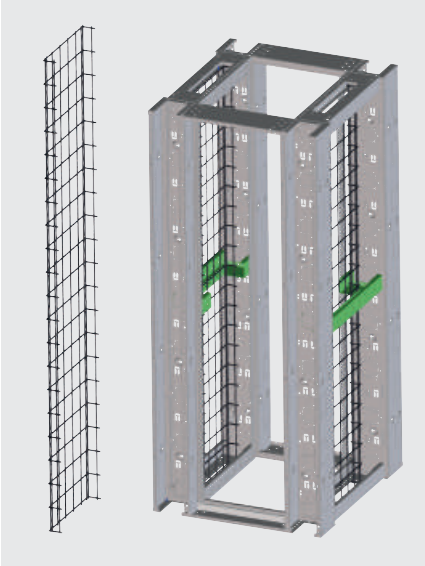

- serves the structured and flexible cable routing in the rack
- Mounting laterally in the base system over the entire cabinet height
- H = 2100 mm

Material:
metal, galvanised
Dimensions (H x W x D):
2100 x (200 / 300 / 400) x 60 mm

Description	Order no.
W = 200 mm	640-037-61
W = 300 mm	640-037-63
W = 400 mm	640-037-64
mounting set	640-037-55

Important notes:

Questions for the sales team:


19" TiRAX cabinet system from page 11


19" NETcell cabinet system from page 65


Open 19" racks from page 83


19" floor-standing / wall-mounted enclosure VARi IT from page 97


Wall-mounting enclosure systems from page 111


Air conditioning technology from page 129


Power distribution system from page 137

Cabinet monitoring from page 155

Cable management from page 163

Distribution technology from page 169

General accessories / distribution technology from page 177



You can read more about products from the apra-group at www.apra-norm.com

Modular DIN rail system

The DIN rail housing consists of an upper shell **(1)**, a lower shell **(2)** and a DIN rail holder **(3)**. It is provided with one cable entry each for an M20 and M25 cable gland **(4)**. Depending on the network application, the DIN rail housing is differentiated into a copper "Cu" and a glass fiber "Gf" version and supplemented by further accessories (see below).

Cu version:
The DIN rail housing is additionally equipped with a high-quality Cu distribution panel in the "6-fold CAT 6A" version.

GF version:
The DIN rail housing is supplemented with a "GF cable manager" **(5)** for routing cable reserves as well as a front panel for the corresponding type of coupling **(6)**. Various types of common fiber optic couplings for the industrial environment are available here.

Pre-assembly and execution in special colors on request!

Material:
sheet metal
Finish:
RAL 7035 light grey
Dimensions (H x W x D):
133 x 43 x 135 mm
Delivery:
mounting material included

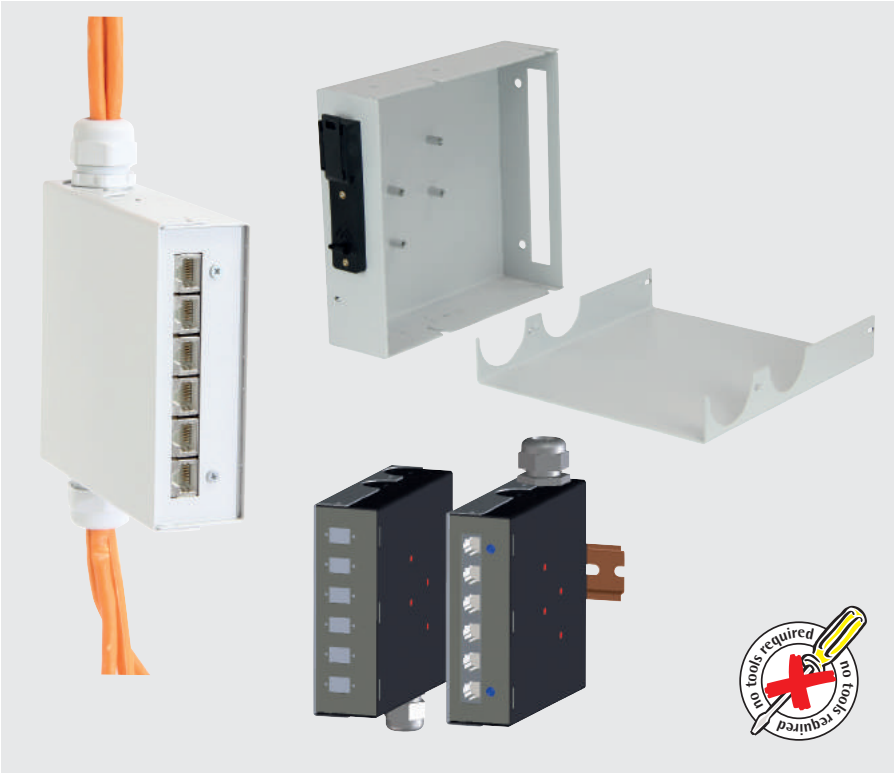

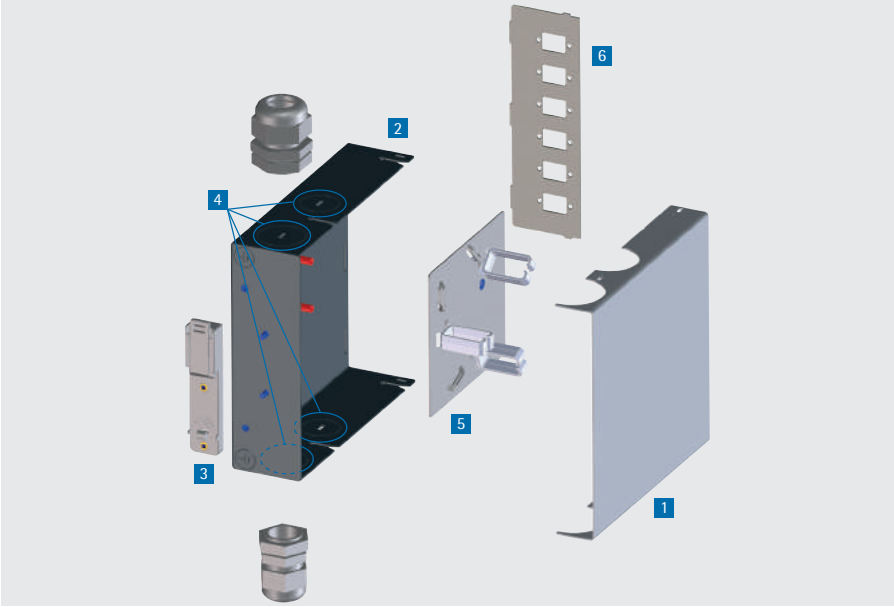

Description	Order no.
DIN rail housing version "Cu" CAT6 A (6 ports)	213-510-10
DIN rail housing version "Gf" 6x SC-Simplex (6 Ports)	213-510-22
DIN rail housing version "Gf" 6x SC-Simplex (12 Ports)	213-510-25
DIN rail housing version "Gf" 6x ST-Simplex (6 Ports)	213-510-28
Cable gland M20 incl. Locknut	640-115-01
Cable gland M25 incl. Lock nut	640-115-02

www.apra.de

19" DIN rail support 3 U

- for a recessed mounting of top hat rail enclosures at 19" levels of cabinets, racks or enclosures
- standard fitted with top hat rail TS 35 (width 425 mm)
- perfect to mount our top hat rail enclosures apraRail
- integrated cable guarding and strain-relief by cable clip bar

Material:
sheet steel 1.5 mm
Finish:
galvanised resp.
RAL 7035 light grey
Delivery:
assembled

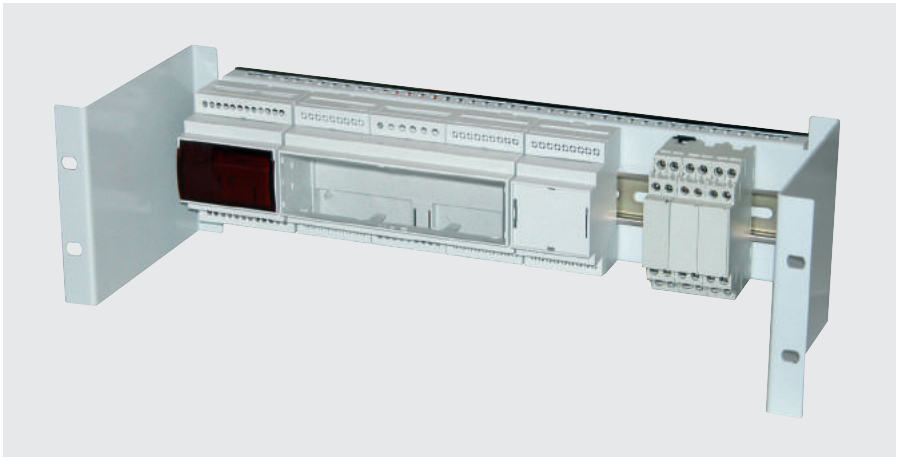

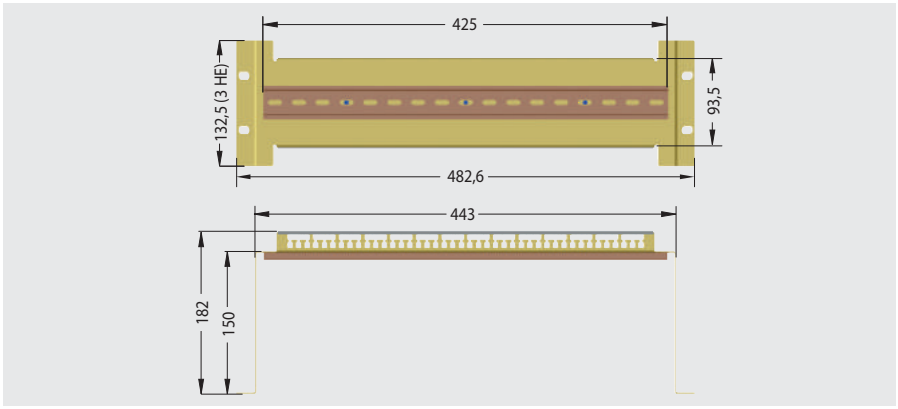

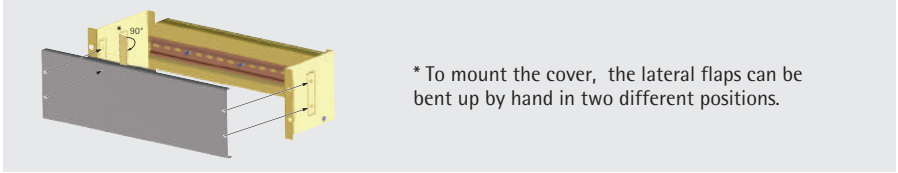

* To mount the cover, the lateral flaps can be bent up by hand in two different positions.

Finish	Order no.
verzinkt	205-420-00
RAL 7035	205-420-10

Other top hat rail types, installation widths, heights or depths available on request!

Cover (protection against contact)

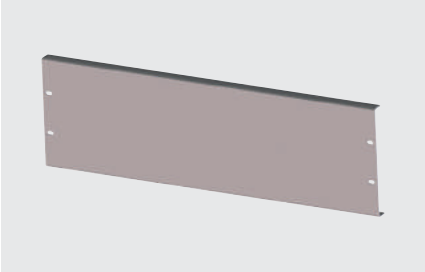

- for 19" top hat rail support 3 U

Finish	Order no.
galvanised	205-420-20
RAL 7035	205-420-25

DIN rail fixling clamp (set)

- quick, safe and sturdy fixing of small enclosures, pc boards and components to rails and support rails (TS35)
- can be easily fixed from inside or outside to the rear panel
- 6 versions are available
- set = 10 pieces

Material: PA6 GF 30, black, flammability rating acc. to UL94 V-0

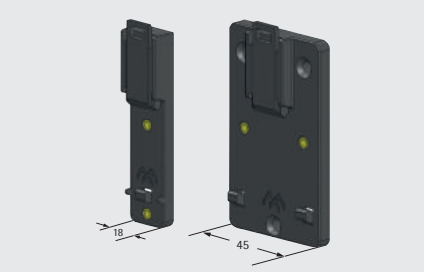

Description	Order no. (1 Set = 10 pieces)
45 mm wide with through hole	442-311-20
45 mm wide with threaded inserts	442-311-25
18 mm wide with through hole	442-311-30
18 mm wide with threaded inserts	442-311-35

Modular technology

- system for accommodating fibre optics, CAT.6 and telephone modules
- ideal for very high packing densities
- based on a 19" subrack, which can accommodate up to 12 modules (7 HP per module)
- screw-on 19" FO shelf 1 U for secure cable feed through
- 5 front-mounted cable clips for neat horizontal switching
- compact and stable 4U component

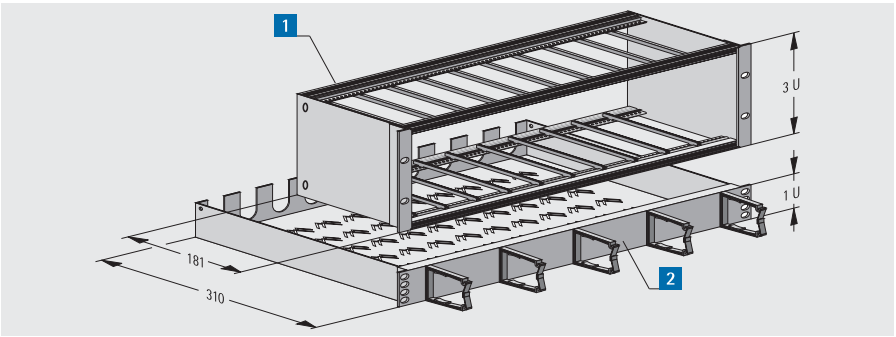

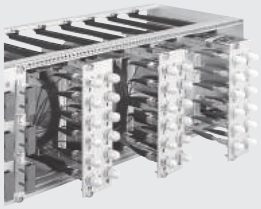

Subracks equipped with different GF modules



Subracks equipped with modular technology

1 19" subrack 3 U

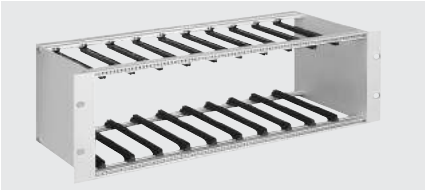

- installation width 84 HP
- for the integration of up to 12 modules (with 7 HP module) including 24 plastic card guides
- includes mounting material

Material:
aluminium/plastic
Finish:
anodised/chromated
Dimensions (H x W x D):
132,5 x 482,6 x 181 mm

Delivery

Item	pc.	Description
1	2	Front bracket
2	2	Side panels
3	4	Module rails
4	2	Threaded strips M 2.5
5	24	Card guides
6	1	Screw set M 5 × 8 (4x)
7	1	Mounting material

Order no.
213-084-00

2 19" shelf 1 U

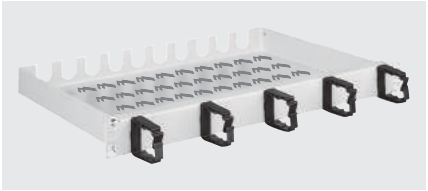

- for accommodation of wire and cable lengths routed from the rear through slot openings. M 20 screw connections are used in the openings to hold the cables.
- perforated in the bottom area for unhindered air circulation and neat cable arrangements, e.g. with cable ties
- includes mounting material

Finish:
RAL 7035 light grey
Dimensions (H x W x D):
44 x 482,6 x 310 mm

Delivery

Item	pc.	Description
1	2	FO shelf
2	5	Cable conduit
3	1	Mounting material

Order no.
213-085-00

www.apra.de

Empty fibre optic modules

The fibre optic modules (3 U, 7/8 HP) are ideal when high packing densities are required in professional distribution systems.

- an extended-length compartment is integrated on the opposite side of the splice cassette for accommodating spare wire lengths in the support panel.
- the front panel may be fitted with up to 12 numbered ST or SC couplings.
- wire pigtails are routed from the front panel to the extended-length compartment and from there via openings into the splice cassette.
- approx. 1 m of the colour-coded wires is deposited and stored here.
- a whole range of feed-through and retainer options are available in the extended-length compartment and splice cassette

Material:
front panel: aluminium, anodised
support panel: sheet metal, galvanised
Dimensions (H x W x D):
3 U x 7/8 HP x 240 mm

Other module variants on request!

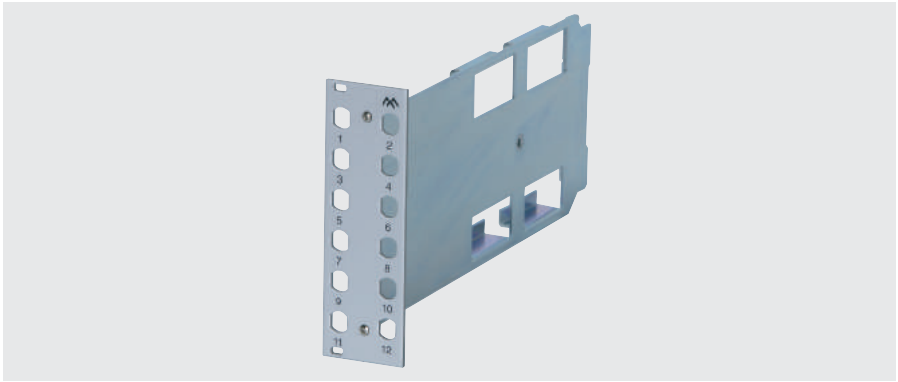

Delivery

Item	pc.	Description
1	1	Front panel with screw holder and neck collar screws M 2.5
2	1	Support panel with integrated extendedlength compartment
3	1	Splice cassette
4	1	Splice cassette cover
5	1	Mounting material

HP	Description	Order no.
8	12 x ST	213-120-10
8	12 x SC (6 x SC-duplex)	213-120-11
8	12 x E2000 (6 x duplex)	213-120-12
7	12 x SC (6 x duplex)	213-120-13
7	12 x E2000 (6 x duplex)	213-120-14
7	12 x E2000 (SC-simplex)	213-120-17

CAT.6A patch panel 6-way/12-way

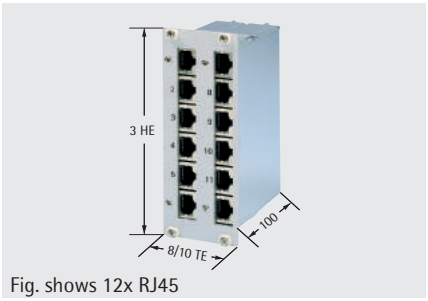

Fig. shows 12x RJ45

- shielded CAT.6 distribution panel
- 6-way RJ 45 (3 U / 8 HP) or 12-way RJ 45 (3 U / 10 HP)
- metal enclosure with large lowimpedance galvanised surfaces
- LSA Plus connecting system
- labelled aluminium front panel

Finish:
front panel: anodised
enclosure: galvanised

Description	Order no.
6-way distribution panel	213-503-10
12-way distribution panel	213-503-30

Blind/partial front panels 3 U



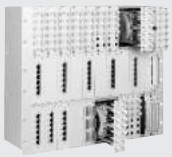
Subracks equipped with modular technology

- for fitting non-reserved pitches (HP) in the subrack

Material:
Aluminium 2,5 mm
Finish:
anodised/chromated

Feature	Order no.
Blindplatte 4 HP	243-304-00
Blindplatte 7 HP	243-307-00
Blindplatte 8 HP	243-308-00

Fibre optic modules pre-assembled

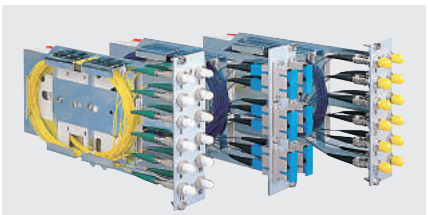
Sample configuration

Pre-assembly means:

- mounting of the coupling on the front panel and fixing of the pigtail
- secure laying of wires from the front panel to the splice cassette with sufficient
- wire lengths of approx. 1.5 m
- deposit of an additional approx. 1 m wire in the splice cassette
- storing of the coloured fibres in the splice cassette

We are also happy to offer you pre-made goods in the areas of "Fiberglass Modules" and "Splice Boxes".
Ask us, we will gladly advise you!

19" FO splice box 1 U

www.apra.de

19" FO splice box 1 U

- ease of use and installation for structured cabling using fibre optics
- modular construction allows you to choose between an extractable or built-in box with different front panels
- installation of the front panels either recessed or flush with the 19" level
- also available pre-assembled

Dimensions (H x W x D):
44 x 482,6 x 260 mm
(built-in)
44 x 482,6 x 313 mm
(extractable)

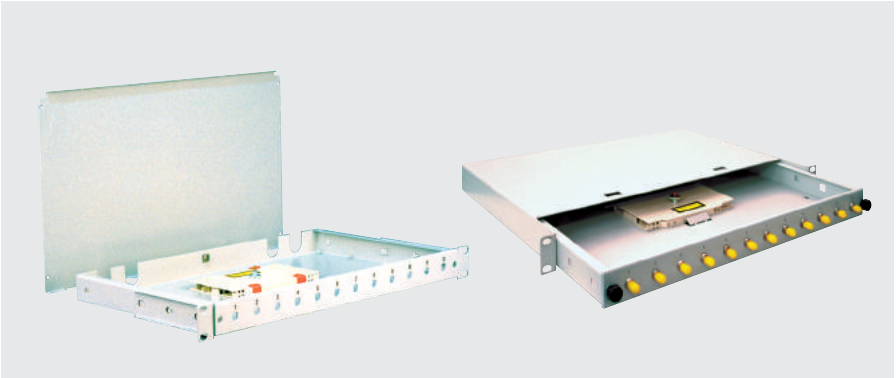

Sample configuration:
19" splice box

Sample configuration:
19" splice box, pre-assembly

Description	Feature	Order no.
12 x ST	19" FO splice box (built-in)	213-301-12
24 x ST	19" FO splice box (built-in)	213-301-24
6 x SC Duplex (12 Ports)	19" FO splice box (built-in)	213-302-12
12 x SC Duplex (24 Ports)	19" FO splice box (built-in)	213-302-24
12 x SC* simplex	19" FO splice box (built-in)	213-303-12
24 x SC* simplex	19" FO splice box (built-in)	213-303-24
12 x ST	19" FO splice box (extractable)	213-311-12
24 x ST	19" FO splice box (extractable)	213-311-24
6 x SC Duplex (12 Ports)	19" FO splice box (extractable)	213-312-12
12 x SC Duplex (24 Ports)	19" FO splice box (extractable)	213-312-24
12 x SC* simplex	19" FO splice box (extractable)	213-313-12
24 x SC* simplex	19" FO splice box (extractable)	213-313-24

* These boxes are also suitable for the integration of an E2000 simplex mid-section. • FO splice boxes for other plug-in connectors on request!

Delivery

Item	pc.	Description
1	1	Drawer
2	1	Cover
3	1	Front panel

FO splice cassette/cover

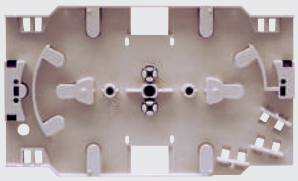

- FO splice cassette with 4 cabling and wire entry areas
- one angled entry area is designed with 3 retention options
- fibre hold-down devices are integrated in the splice cassette area for the fibre lengths

Material:
ABS

Description	Order no.
Splice cassette	640-400-01
Splice cassette cover	640-400-02
Splice protective sleeve	640-400-05

Pre-assembly for 19" splice box 1 U

Of course, we also offer this box pre-assembled with fibre optics. This saves you time-consuming and costly on-site assembly.

Pre-assembly means:

- mounting of the coupling on the front panel and fixing of the pigtail
- secure laying of wires from the front panel to the splice cassette with sufficient wire lengths of approx. 1.5 m
- deposit of an additional approx. 1 m wire in the splice cassette
- storing of the coloured fibres in the splice cassette

Description	Order no.
1 x ST 50/125	214-321-01
1 x ST 62, 5/125	214-331-01
1 x ST 9/125	214-341-01
1 x SC 50/125	214-322-01
1 x SC 62, 5/125	214-332-01
1 x SC 9/125	214-342-01

Please order FO splice box and accessories separately!

www.apra.de

19" copper distribution panels 1 U CAT.3/CAT.6A

- suitable for data transfers with transfer rates of up to 500 Mhz
- supports industrial use in accordance with EN 50081-2 and 50082-2 (only shielded models)
- connection of the wires via coloured LSA Plus IDC termination (in accordance with EIA/TIA 568A)
- large shield contact area on the shielded models directly on the circuit board using cable clips included, without the need for any additional twisting of the screen netting (with CAT.6 panel)
- distance between connecting terminals and shield contact on the circuit board eliminates any danger of short circuiting between screen netting and connecting wires
- cable strain relief with supplied cable ties without screws or any special tools
- consecutive front panel imprint

Material:
enclosure: sheet metal
shielding cap for shielded models: stainless steel
Finish:
Front: RAL 7035 light grey



19" Cu distributor CAT 6A



19" Cu distributor CAT 6A



19" Cu distributor CAT 3

Other FO products available on request!

The components meet the requirements in accordance with ISO/IEC 11801 (Draft 2001) in class Channel E.

Description	Order no.
25-way CAT.3, unshielded	213-504-10
24-way CAT.6, shielded	213-506-25

CAT.6A patch panel 6-way/12-way

- suitable for accommodation in a 19" subrack (see page XY) or in the LAN small distribution unit (see page XY)
- shielded CAT.6A distribution panel
- 6-way RJ 45 (3 U / 8 HP) or 12-way RJ 45 (3 U / 10 HP)
- metal enclosure with large lowimpedance galvanised surfaces
- LSA Plus connecting system
- labelled aluminium front panel

Finish:
front panel: anodised
enclosure: galvanised

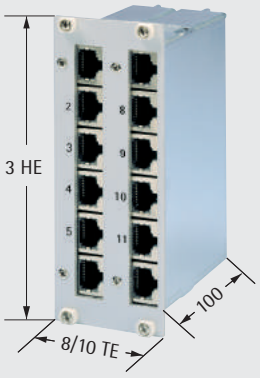

Fig. shows 12x RJ45



Subracks equipped with modular technology

Description	Order no.
6-way distribution panel	213-503-10
12-way distribution panel	213-503-30

Important notes:

Questions for the sales team:


19" TiRAX cabinet system from page 11


19" NETcell cabinet system from page 65


Open 19" racks from page 83


19" floor-standing / wall-mounted enclosure VARi IT from page 97


Wall-mounting enclosure systems from page 111


Air conditioning technology from page 129


Power distribution system from page 137


Cabinet monitoring from page 155

Cable management from page 163

Distribution technology from page 169

General accessories / distribution technology from page 177

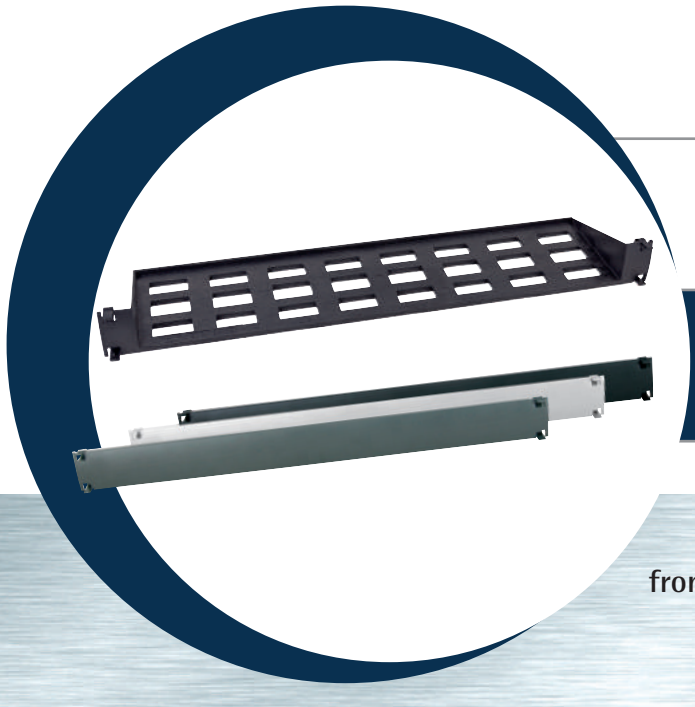

You can read more about products from the apra-group at www.apra-norm.com

19" shelf 1 U fixed installation "VARiplain"

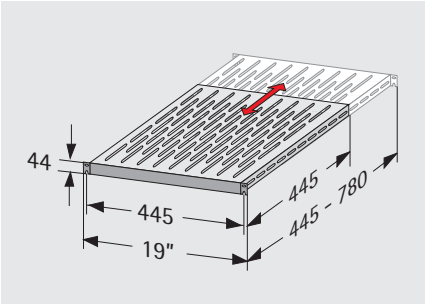

- depth variable due to VARiplain technology
- telescopic: 445 - 780 mm (see fig.)
- simple one-person assembly through open long hole in the 19" front (hook-in)

Material:
sheet metal
Finish:
RAL 7035 light grey
RAL 9005 jet black
Load capacity:
150 kg (distributed load/static)
Dimensions (H x W x D):
1 U (44 mm) x 19" (482,6 mm) x 445 - 780 mm
Floor space (b x t):
445 x (445 - 780) mm
Delivery:
mounting material included

Colour	Order no.
RAL 7035	316-036-99
RAL 9005	316-036-69

19" shelf 1.5 U "extractable"

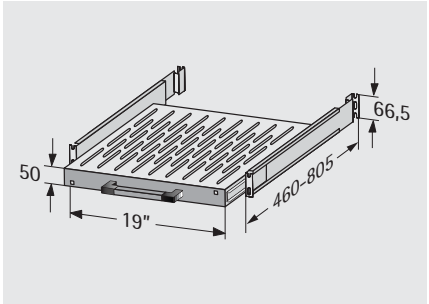

- variable-depth installation
- extraction length 500 mm
- simple one-person assembly

Material:
sheet metal
Finish:
RAL 7035 light grey
RAL 9005 jet black
Load capacity:
60 kg (distributed load/static)
Dimensions (H x W x D):
1,5 U (66,5 mm) x 19" (482,6 mm) x 465 - 665 mm
Floor space (b x t):
410 x (465 - 665) mm
Delivery:
mounting material included

D mm	Colour	Order no.
465	RAL 7035	318-141-00
665	RAL 7035	318-141-01
465	RAL 9005	318-141-50
665	RAL 9005	318-141-51

19" shelf 2U, fixed

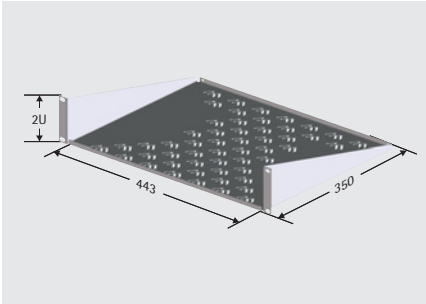

- simple assembly on the 19" grid (only one 19" level required)
- ventilated

Material:
sheet metal
Finish:
RAL 7035 light grey
RAL 9005 jet black
Load capacity:
15 kg (distributed load/static)
Dimensions (H x W x D):
2 U (88 mm) x 19" (482,6 mm) x 350 mm
Floor space (b x t):
443 x 350 mm
Delivery:
mounting material included

Colour	Order no.
RAL 7035	315-810-20
RAL 9005	315-810-25

Shelf 1 U, vertical

- for installation of **non-19"-compatible** components
- depth: 250 mm

Finish:
RAL 7035 light grey

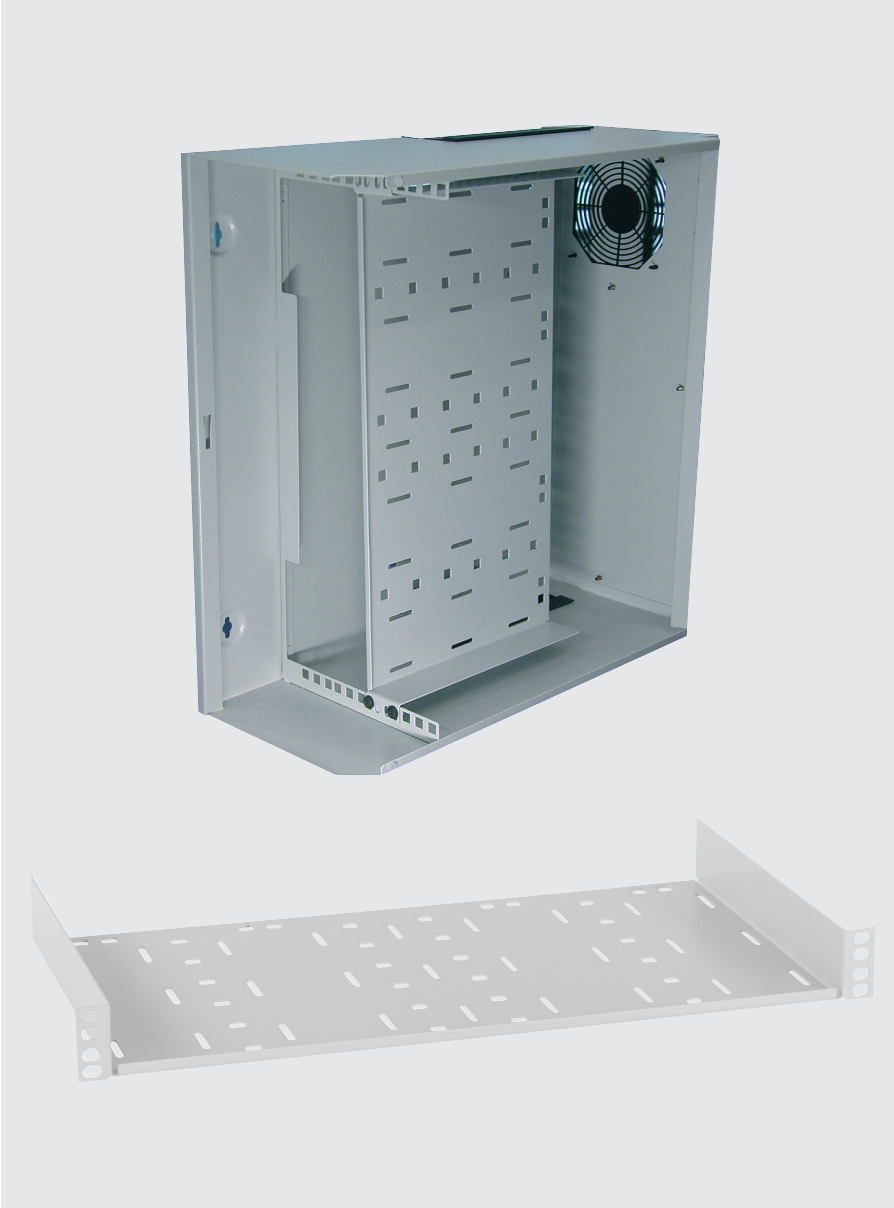

Bestell-Nr.
213-030-22

19" blind panel

19" blind panel, plastic, 1 U



- air separation function: cost-saving and very effective option for reducing energy costs in data centres
- visual upgrade of the rack by concealing free 19" surfaces
- stylish design due to rounded front surface of the panel
- short assembly time: the blind panel is easily and without tools clipped into the19" grid.
- can be removed and reinserted at any time without wear and tear and without tools
- protection against dust entry
- fire protection classification to UL94 V-0
- weight-saving in comparison to traditional metal panels

Material:
Lexan 920, fire class to UL 94 V-0, ROHS-compliant
Finish:
RAL 7016 anthracite grey, RAL 7035 light grey or RAL 9005 jet black
Delivery:
Set = 10 pieces
Set = 136 pieces

Colour	Lieferform	Order no.
RAL 7016	Set = 10 pc.	213-156-25
RAL 7016	Set = 136 pc.	213-156-40
RAL 7035	Set = 10 pc.	213-156-30
RAL 7035	Set = 136 pc.	213-156-45
RAL 9005	Set = 10 pc.	213-156-78
RAL 9005	Set = 136 pc.	213-156-79

19" blind panel sheet metal



Material:
sheet metal 1,5 mm
Finish:
RAL 7035 light grey
RAL 9005 jet black
Dimensions (H x W x D):
1-4 U x 482,6 x 10 mm
Delivery:
mounting material included

U	Colour	Order no.
1	RAL 7035	213-156-00
1	RAL 9005	213-156-10
2	RAL 7035	213-158-00
2	RAL 9005	213-158-10
3	RAL 7035	213-159-00
3	RAL 9005	213-159-10
4	RAL 7035	213-160-00
4	RAL 9005	213-160-10

www.apra.de

19" drawers

- for secure storage of documents in 19" cabinets or enclosures
- extractable
- optionally available with lock
- 19" installation dimensions to IEC 60297-3-100

Material:
frame: sheet steel 1.5 mm
drawer: sheet steel 1.0 mm
Finish:
RAL 7035 light grey
Delivery:
assembled, includes mounting material



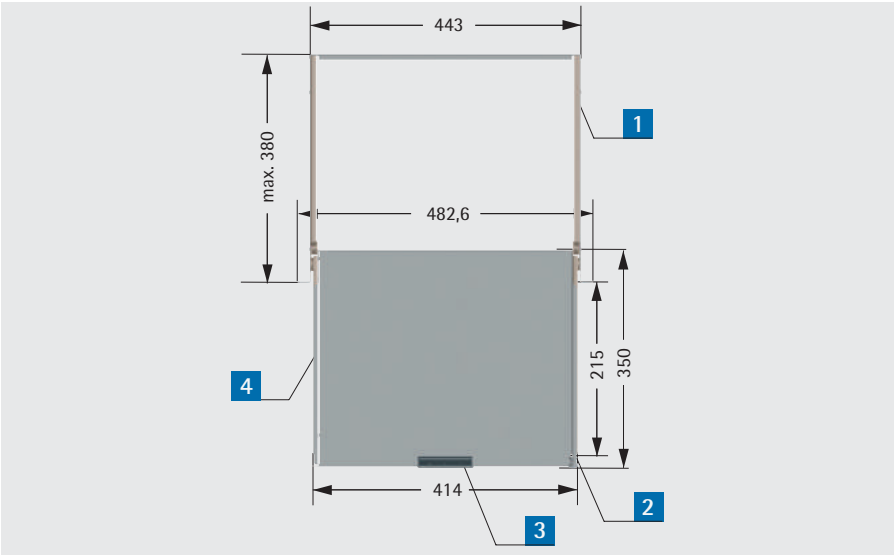

Delivery

Item	pc.	Description
1	1	Installation frame
2	1	Drawer with front panel
3	1	Recess handle, black
4	1 pair	Single sliding mechanisms
5	1	Mounting material

U	H mm	D mm	Description	Order no.
1	44	378	without lock	202-219-50
2	88	372		202-219-53
3	132,5	372		202-219-56
1	44	378	with lock	202-219-60
2	88	372		202-219-63
3	132,5	372		202-219-66

19" keyboard plug-in unit 2 U

www.apra.de

19" keyboard plug-in unit 2 U for standard keyboards

- keyboard plug-in unit with fold-down front panel
- accommodates all standard keyboards
- existing keyboards can be integrated in to the 19" rack, even if they are not 19"-compatible
- front-mounted, large, extractable mouse rest
- mounting on front and rear 19" level, whereby the clearance to the front/rear level can be individually adjusted from 445 mm up to 845 mm.
- 19" installation dimensions to IEC 60297-3-100
- **from a cabinet depth of 800 mm**

Application:
for use as an input console in 19" cabinets or user desks
Material:
sheet metal
Finish:
RAL 7035 light grey
Dimensions (H x W x D):
2 U (88 mm) x 19" (482,6 mm) x 550 mm
Delivery:
assembled

- Keyboard is not included in the scope of delivery.
- The maximum height of the keyboard/mouse is 36 mm.

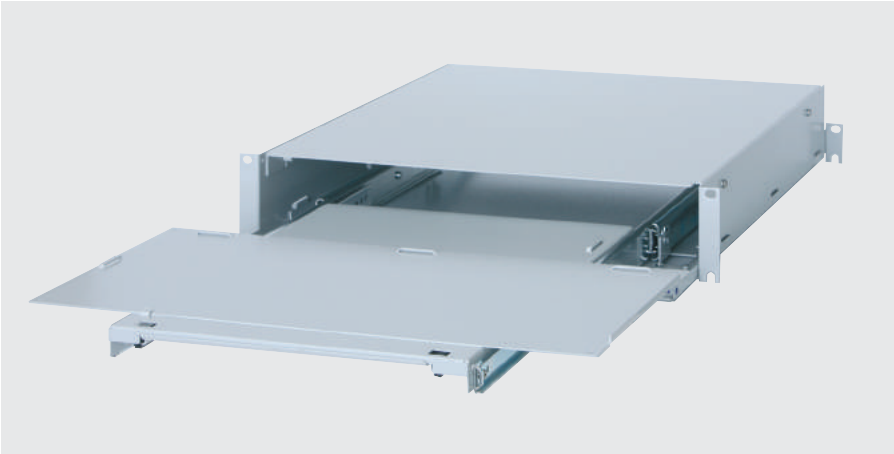

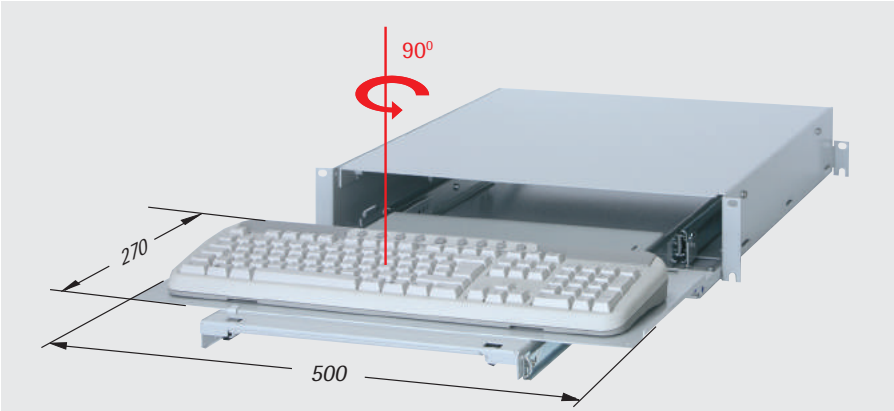

To insert, the keyboard support plate together with the keyboard can be rotated 90°.

Delivery

Item	pc.	Description
1	1	Chassis top cover
2	1	Drawer
3	1	Keyboard support plate, rotatable
4	1	Mouse rest
5	2	Telescopic rails
6	1	Front panel
7	1	Mounting material

Description	Order no.
19" keyboard plug-in unit 2 U	202-868-30

www.apra.de

19" keyboard plug-in unit 1 U

- low total height
- extractable
- with integrated, fold-down mousepad
- mousepad can be added on the left or right
- keyboards up to a width of 433 mm and a height of 36 mm can be used
- 19" installation dimensions to IEC 60297-3-100

Application
for use as an input console in 19" cabinets or user desks
Material:
sheet metal
Finish:
RAL 7035 light grey
RAL 9005 jet black
Dimensions (H x W x D):
44 x 482,6 x 470 mm
Delivery:
assembled



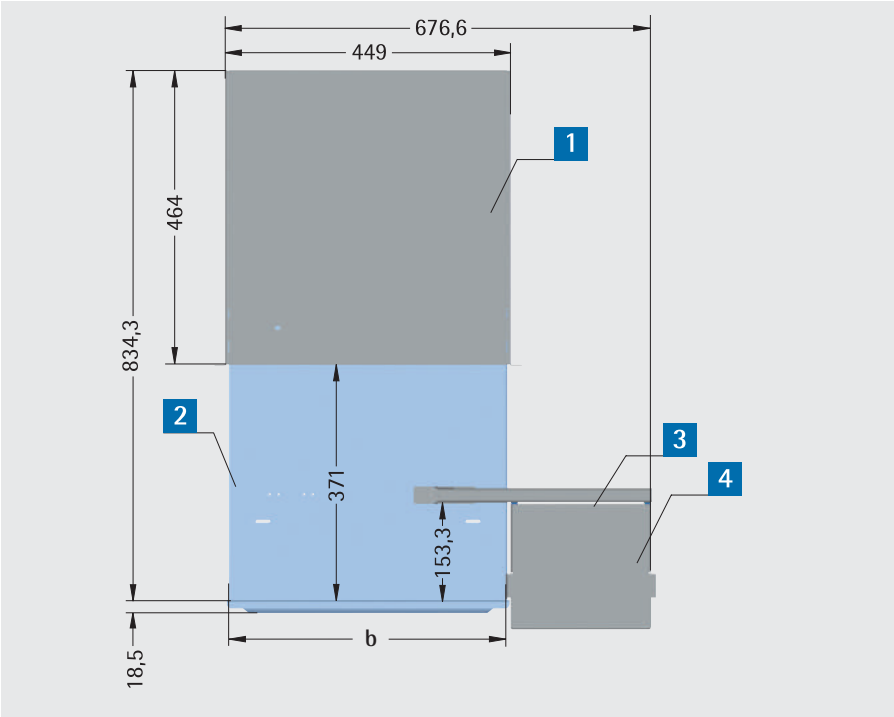

Top view

- Mouse and keyboard are not included in the scope of delivery.
- The maximum height of the keyboard/mouse is 36 mm.
- Integration on slide rails is recommended.

Delivery

Item	pc.	Description
1	1	Chassis
2	1	Drawer
3	1	Mouse rest
4	1	Mouse pad
6	1	Mounting material

Description	Colour	Order no.
Plug-in unit without keyboard	RAL 7035	202-870-50
Plug-in unit without keyboard	RAL 9005	202-870-55

19" TFT keyboard plug-in unit 1 U with 17" display

The TFT keyboard plug-in unit includes all operating functions such as 17" LCD monitor, keyboard and touchpad in only one height unit. The server, PC and KVM-switch are connected via an adapter cable with a PS/2 interface or USB

- designed as a 19" component: extraction via high-quality telescopic rails
- with 17" display DDC 2 with max. resolution 1280 × 1024
- keyboard with separate number block and touch pad (PS/2)
- power supply 230 V / 50 Hz, can be switched to 120 V / 60 Hz

Finish:
black
Delivery:
includes operating instructions and power supply unit

Order no.
202-869-17



19" TFT keyboard plug-in unit 1 U with 17" display and KVM switch

- as above, but with a KVM switch to control 8 servers
- resolution: 1280 × 1024

Finish:
black
Delivery:
includes operating instructions and power supply unit

Order no.
202-869-19



Rear view: TFT plug-in unit with KVM switch

cables for TFT keyboard plug-in units

Description	Length m	Order no.
USB adapter cable from the KVM-switch to the server	1,8	202-869-35
	3,0	202-869-36
	6,0	202-869-37
PS/2 adapter cable from the KVM-switch to the server	1,8	202-869-26
	3,0	202-869-27
	6,0	202-869-28

Subject to technical modification. Picture can differ from actual product.

www.apra.de

19" DIN rail support 3 U

- for a recessed mounting of top hat rail enclosures at 19" levels of cabinets, racks or enclosures
- standard fitted with top hat rail TS 35 (width 425 mm)
- perfect to mount our top hat rail enclosures apraRail
- integrated cable guarding and strain-relief by cable clip bar

Material:
sheet metal 1,5 mm
Finish:
galvanised resp.
lackiert RAL 7035 light grey
Delivery:
assembled

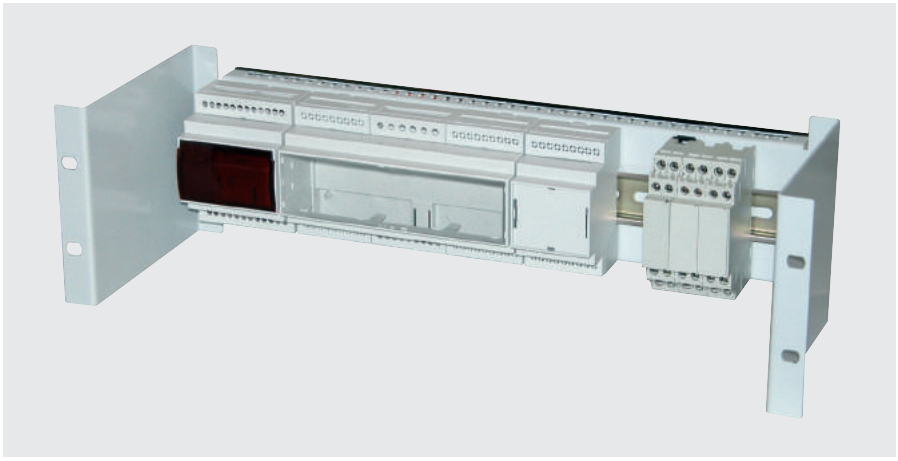

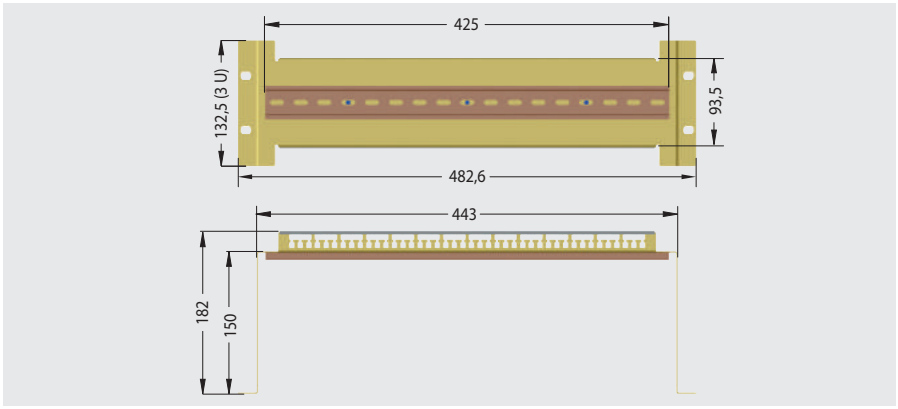



Cover (protection against contact)
* To mount the cover, the lateral flaps can be bent up by hand in two different positions.

Finish	Order no.
galvanised	205-420-00
RAL 7035	205-420-10

Other DIN rail types, installation widths, heights and depths available on request!

Cover (protection against contact)

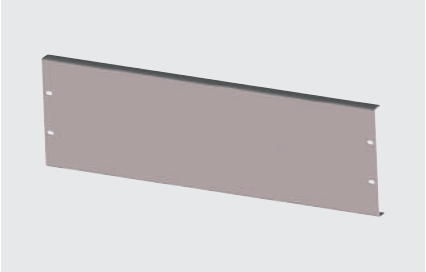

- for 19" top hat rail support 3 U

Finish	Order no.
galvanised	205-420-20
RAL 7035	205-420-25

DIN rail fixling clamp (set)

- quick, safe and sturdy fixing of small enclosures, pc boards and components to rails and support rails (TS35)
- can be easily fixed from inside or outside to the rear panel

Material:
PA6 GF 30, black, flammability rating acc. to UL94 V-0



Description	Order no. (1 Set = 10 pc.)
45 mm wide with through hole	442-311-20
45 mm wide with threaded inserts	442-311-25
18 mm wide with through hole	442-311-30
18 mm wide with threaded inserts	442-311-35

www.apra.de

Slide rail, screwable/hook-in

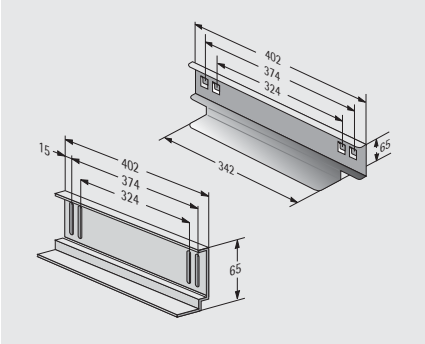

- for screwing/hinging into vertical mountings
- for placing heavy 19" plug-ins
- **2** vertical mountings are required for fixing
- Delivery: 1 pair

Material:
sheet metal, galvanised
Load capacity:
50 kg
Delivery:
mounting material included

Description	Order no.
screwable	312-544
hook-in	316-544-00

19" slide rail, variable depth

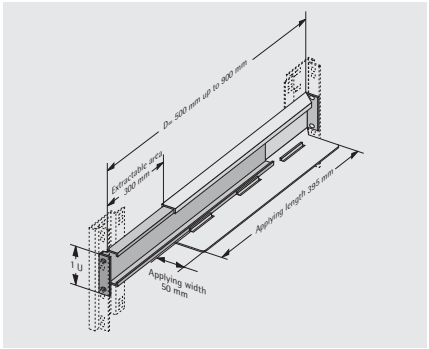

- for cabinet depths of 600 - 900 mm
- telescopic design: can be extracted/adjusted by 300 mm
- Delivery: 1 pair

Material:
sheet metal 1,5 mm, galvanised
Load capacity:
50 kg
Delivery:
mounting material included

Order no.
315-258-00

Slide rail, variable depth

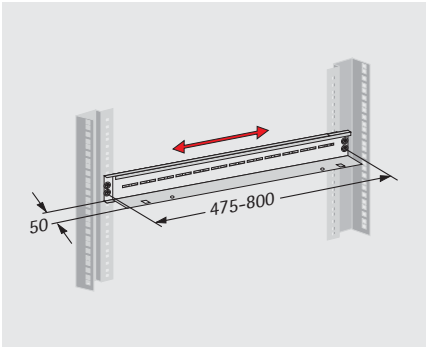

- for 19" plug-in units irrespective of the clearance to the 19" levels
- depth-adjustable
- for use as of a cabinet depth of 800 mm
- Delivery: 1 pair

Material:
sheet metal 1,5 mm, galvanised
Load capacity:
50 kg
Delivery:
includes mounting material

Order no.
316-544-20

Slide rail, short for 19" vertical mountings and pivot frames

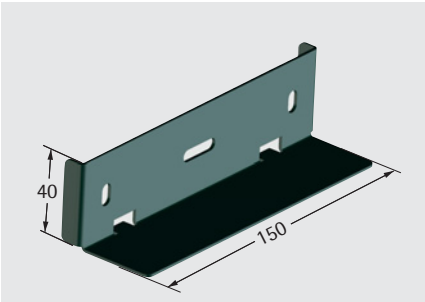

- with only **one** 19" level or pivot frame
- delivery: 1 pair

Material:
sheet metal, 2 mm galvanised
Load capacity:
15 kg
Delivery:
includes mounting material

Order no.
318-129

Cable clamps, metal (set)

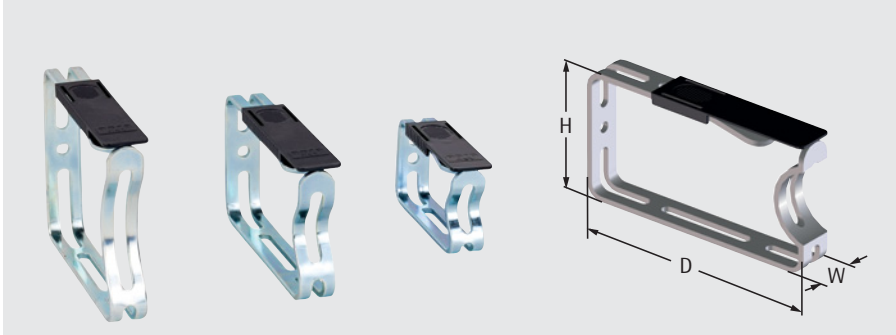

- for securing cables vertically to a 19" frame (for 800 mm wide cabinets)
- set = 10 pieces
- mounting material included

Dimensions (H x W x D) mm	Order no.
44 x 23 x 85	640-036-11
66 x 23 x 125	640-036-12
88 x 23 x 125	640-036-13

Potential equalisation rail

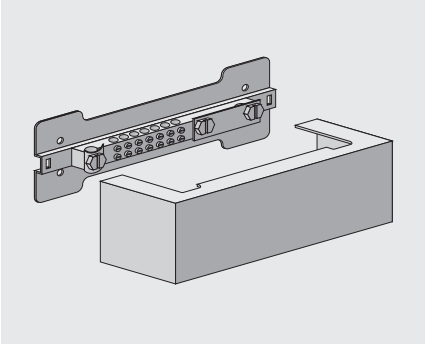

- covered

Delivery:
- 1 potential equalisation rail
- mounting material

Order no.
640-200-01

19" Potential equalisation rail 1 U

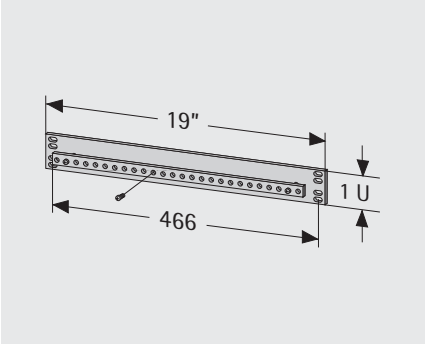

- for 19" or cabinet rack installation
- connection options: 27 × M 5
- rail cross-section: 50 mm²

Material:
sheet metal/copper

Order no.
640-028-00

Potential equalisation bar 1 U

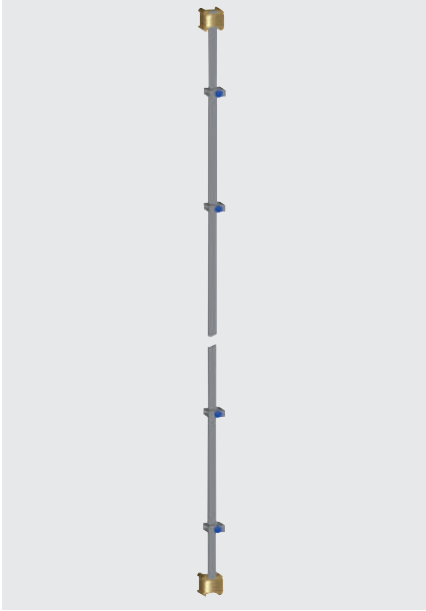

- 30 mm² incl. 10 pieces bail
- mounting material including

L mm	Order no.
2000	640-028-08
1800	640-028-10

Noise absorption foam

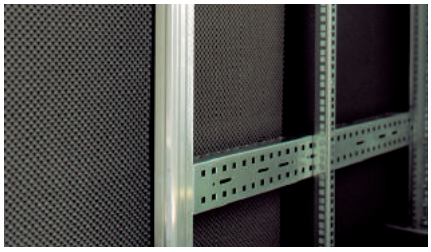

- absorbs up to 10 dB(A) of sound in enclosures (e.g. fan noise)
- self-adhesive on one side
- thermal conductivity: 0.033 W/mk (acc. to DIN 52612)
- temperature range: –40 °C to +100 °C

Material:
PUR ester foam (10 mm): colour grey, with pattern of indentations, partially compressed (air permeable)
Delivery: unmounted
Delivery: 1 m²

If required, we will be happy to affix the noise absorption foam for you before delivering your cabinets or enclosures!

Order no.
671-211

cabinet labeling



- Magnetic label for mounting on cabi nets and enclosures
- optionally fixable with adhesive tape
- removable title block for customization

Delivery:
- Magnetic label for mounting on cabinets and enclosures
- Protective film transparent for magnetic profile 40 x 100 mm
- Adhesive tape, double-sided covered, B = 38 mm

Order no.
855-444

Edge protection rubber band, flexible

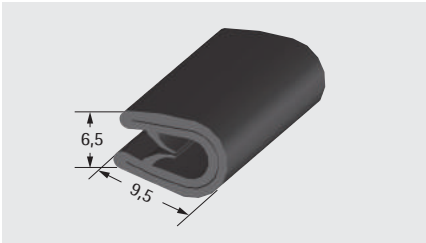

- flexible to adapt to a wide variety of holes
- for sheet thickness 1-2 mm
- piece goods sold by the metre

Material:
rubber, black

Delivery:
1m

Order no.
671-024

Fan 230 V

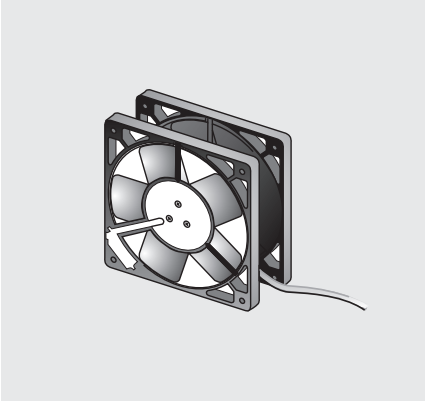

- air flow rate: 160 m^3/h
- connecting cable L = approx. 310 mm
- dimensions: 119 × 119 × 38 mm
- noise level: 40 dB (A)
- mounting material included

Dimensions H x W x D:
119 x 119 x 38 mm

Order no.
230-803

Protective grille, plastic

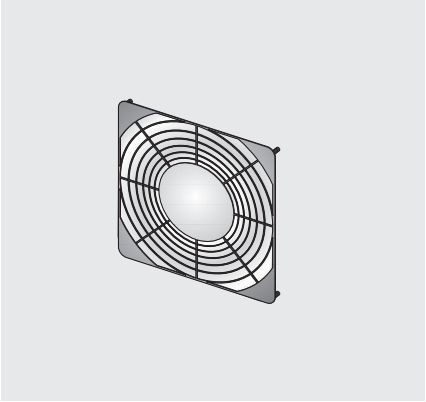

- suitable for all fans with dimensions W x H = 119 x 119 mm

Material:
plastic, black

Description	Order no.
screw on	230-818
clip-in	230-819

Outlet filter

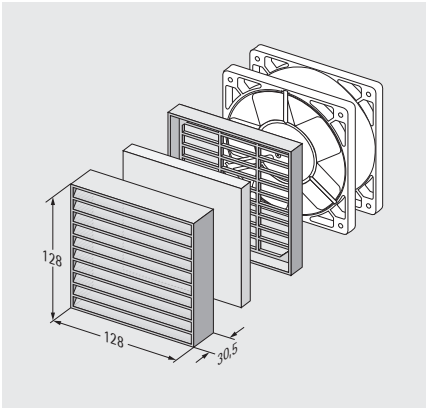

- for individual self-assembly on standard cabinet or enclosure
- outlet filters are preferably installed in conjunction with fans in the upper part of the cabinet

Delivery:
1 outlet filter complete with filter mat, excl. mounting material

Order no.
230-800

Outlet filter IP 54

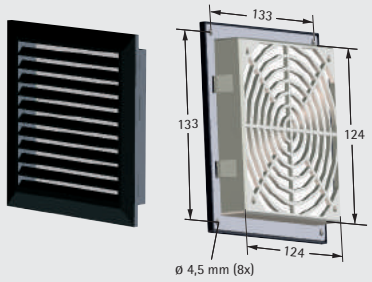

- suitable for fans W × H = 119 × 119 mm
- Dimensions H x W x D: 148 x 148 x (5,5 + 23) mm
- IP rating is achieved with vertical installation and overhead installation
- with filter mat and seal
- quick mounting: snap fastener
- can as an option be screwed on

Material: plastic, black

Order no.
230-780

Spare filter mat

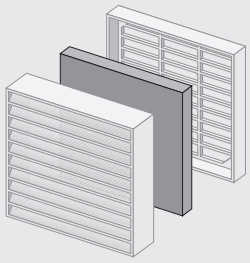

- suitable for outlet filters type 230-800 and 230-780
- Dimensions: 120 × 120 mm

Order no.
230-800-01

Thermostat 230 V

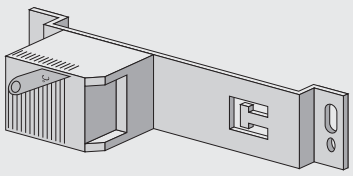

- with mounting bracket and integrated strain relief
- control range 0 - 60 °C
- includes mounting material

Order no.
315-804

Door contact switch



- for switching cooling devices etc. on and off
- includes mounting material

Order no.
640-071-00

LED cabinet light



- cost-optimised LED technology with a power consumption of 5 W (light intensity equivalent to a 75 W light bulb)
- internal power supply unit with wide range voltage 100 - 230 V / AC
- long-life and no maintenance (service life at 20 °C = 60,000 h)
- magnetic attachment for individual mounting in the cabinet
- pressure clamp connection

Connections must be ordered separately!

Description	Order no.
LED cabinet light with switch	640-143-05
LED cabinet light with motion detector	640-143-06
Connection with Euro plug, L = 2,5 m	640-143-08

Terminal box

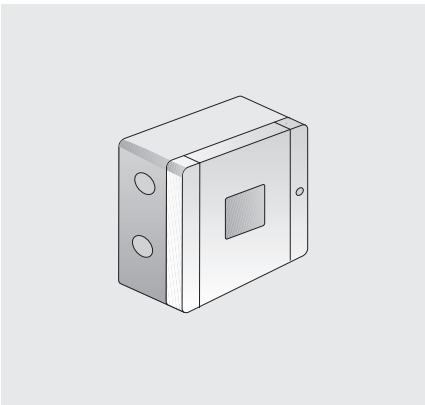

- for use as a cable distribution box
- simple and quick installation

Order no.
640-059

Document pocket



- self-adhesive
- heat-resistant up to 60 °C
- load capacity of up to 3 kg
- your company's logo can be affixed

Dimensions (H x W x D):
235 x 260 x 27 mm
Material:
plastic, black

Order no.
640-100

CD holder for document pocket

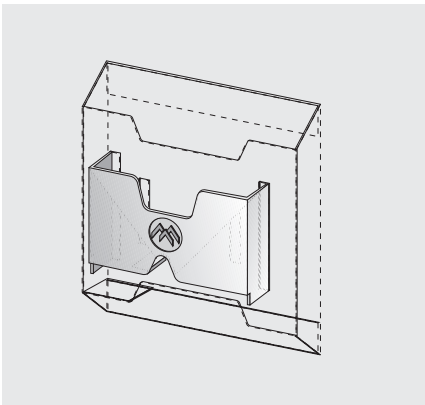

- can be hung in the document pocket

Material:
Aluminium
Finish:
RAL 7035 light grey

Order no.
640-100-10

Screw set M5 / M6 (set)



- necessary for mounting of 19" components into racks or enclosures
- included in delivery:
  - 50 oval head screws M 5 x 12 / M 6 x 16
  - 50 cage nuts M 5 - 8 / M 6 - 8
  - 50 rosettes for lens screws M 5 / M 6, flattened according to standards

Description	Order no.
M 5	630-991
M 6	630-994
Torx M 6	350-001-20

TiRAX screw set

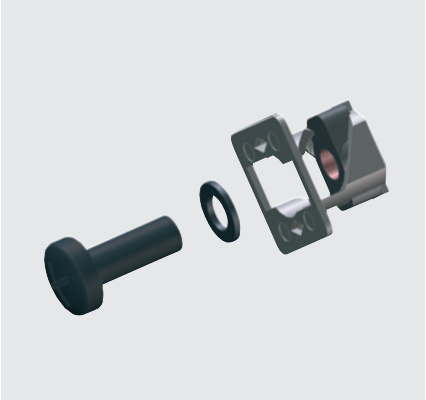

- for rotating mounting in in the TiRAX cabinet racks

Delivery:
each with 20 × special cage nuts M 6, lens head screw M 6 × 16 and washers

Order no.
630-998

19" plug-in nut M5



- For mounting in 19" grid rails with a standard breakthrough 9,5 x 9,5 mm (square perforation)

Material:
Threaded insert, galvanised steel
Plastic housing:
PA (UL-certificate)
Finish: plastic (black)
thread use: galvanized

Description	Order no.
set 4-fold	631-555-04
set 50-fold	631-555-50

Cage nuts M 5 / M 6 (set)

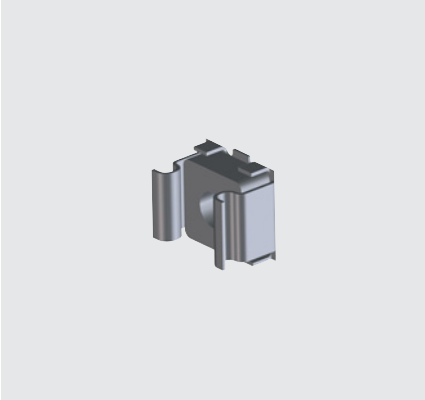

- set = 100 cage nuts
- sheet thickness 1.8 - 2.6 mm

Finish:
galvanised

Description	Order no.
Cage nuts M 5	630-362
Cage nuts M 6	630-363

"Universal" velcro strip



- for quickly securing **non 19"-compatible** components
- length: 300 mm, width: 20 mm
- back to back mounting
- set = 10 pieces

Material:
velcro, black

Order no.
671-122-08

Velcro mount "universal"



- used to accommodate velcro up to w = 20 mm
- for screws M 4 (not included)
- set = 10 pieces

Material:
plastic, black UL94 V-0

Order no.
583-001-08

www.apra.de

Our service all comes from a single source:

- ☑ take advantage of our expertise
- ☑ save time and money



Air conditioning, power supply, cable entry solutions, plug-and-play versions and pre-wiring for enclosures and cabinet systems

At the apra Group, we place particular emphasis on individual and flexible system solutions. Our enclosures and 19" cabinet systems are equipped with components such as a power supply/distribution system and air conditioning technology in line with customer requirements and are supplied with full pre-wiring on request. This enables us to fulfil the most challenging of customer requirements.

From development right through to the finished product, you can benefit from our expertise and flexibility!

Additional accessories for your cabinet and enclosure system can be found here:



Multiple socket strips and other power supply components can be found in the section "Power distribution" from page 137.





A wide range of ventilation and air conditioning components can be found in the section "Air conditioning technology" from page 129.



Suitable cable routing solutions suc as cable clamps, patch bays, etc. can be found in the section "Cable management" from page 163.



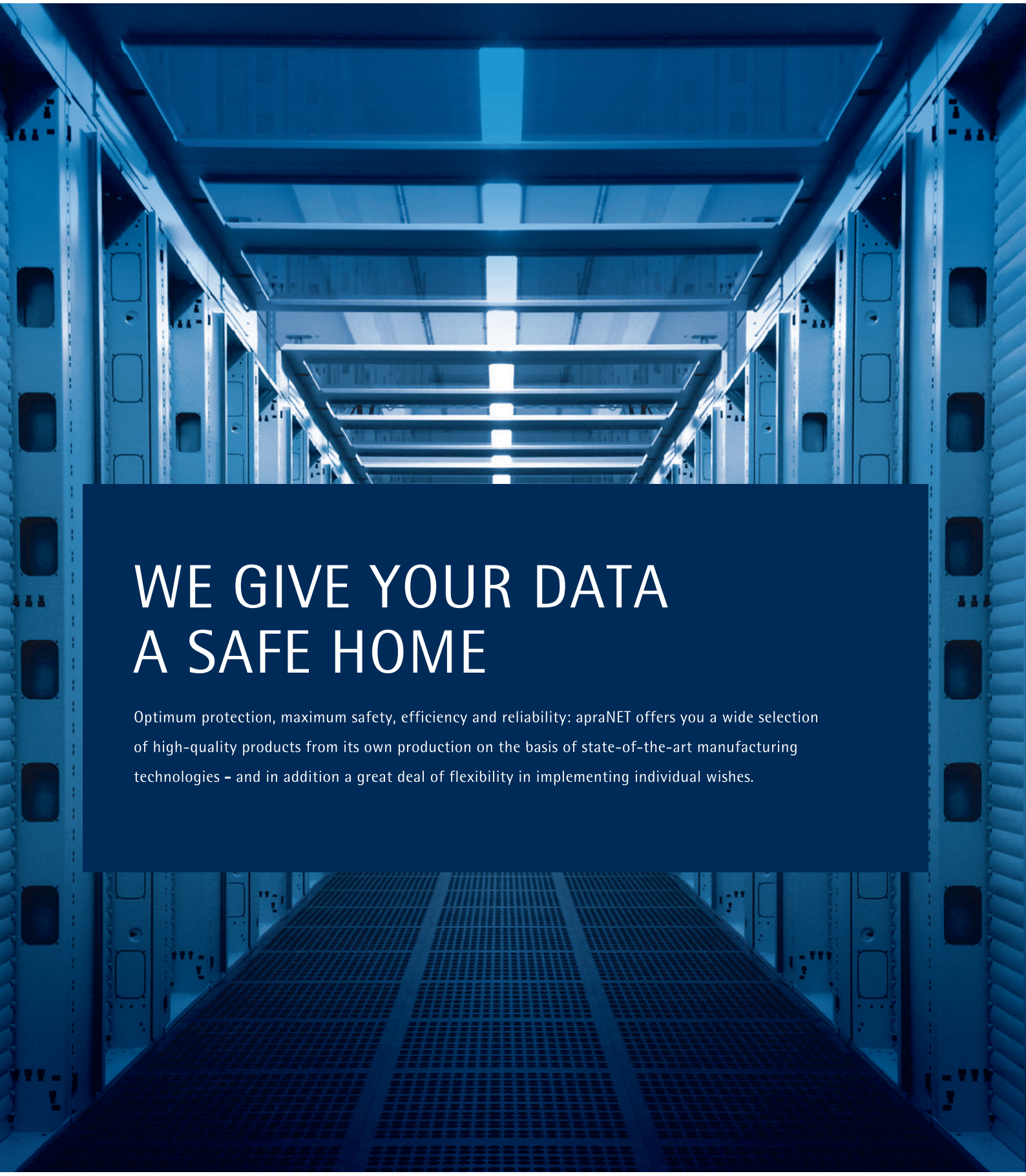

WE GIVE YOUR DATA A SAFE HOME

Optimum protection, maximum safety, efficiency and reliability: apraNET offers you a wide selection of high-quality products from its own production on the basis of state-of-the-art manufacturing technologies – and in addition a great deal of flexibility in implementing individual wishes.

apraNET equips the Enervie Group's data center with the NETcell cabinet system.

With 1.500 employees in North Rhine-Westphalia, the Enervie Group supplies around 400.000 customers with electricity, gas, drinking water and energy-related services. The headquarters of Enervie Südwestfalen Energie und Wasser AG is located in Hagen. The modern data center and additional technical rooms were equipped with 68 NETcell cabinet systems in 2014.



The cabinet system NETcell, nominated for the German Data Center Award, inspires the technical managers at Enervie with the well though-out cable management system, the high load capacity of far more than one ton and the simple installation. Due to the complete disassembly, installation and final assembly can also be carried out in locations that are difficult to access. Based on the integration of the modular enclosure components, Enervie also takes advantage of the NETcell system for energy- and cost-efficient data center air conditioning.

The FernUniversität in Hagen relies on products from apraNET.

The FernUniversität in Hagen is the first and only distance learning university under public law in Germany. With around 77.000 students, it is also Germany's largest university. By awarding degrees such as Bachelor, Master and Doctorate, the FernUniversität in Hagen represents a real alternative to attendance based studies and represents the trend towards lifelong learning.



© FernUniversität / Mette

In 2012 and 2013 the university computer centre was equipped with the NETcell cabinet system specially developed for the data center sector. Especially the flexible installation and mounting options as well as the customer-specific adaption of enclosure components to the data center infrastructure convinced the IT managers at the Uuniversity of the apraNET products and services. Through the field service on-site, the extensive consultation by the office service as well as the own assembly and istallation service apraNET was a reliable partner to the university during the entire project.

apra Group product range



19″ plug-in systems

- 19″ computer plug-in units
- 19″ front and blind panels
- 19″ universal plug-in units
- 19″ printed circuit boards
- 19″ display, keyboard and fan plug-in units



Datacenter, network engineering and industrial applications

- 19" cabinet system TiRAX
- 19" cabinet system NETcell
- Wall enclosure systems
- Wall-mounted and free-standing distributors
- Power Supply/PDU, Air Conditioning and cable management

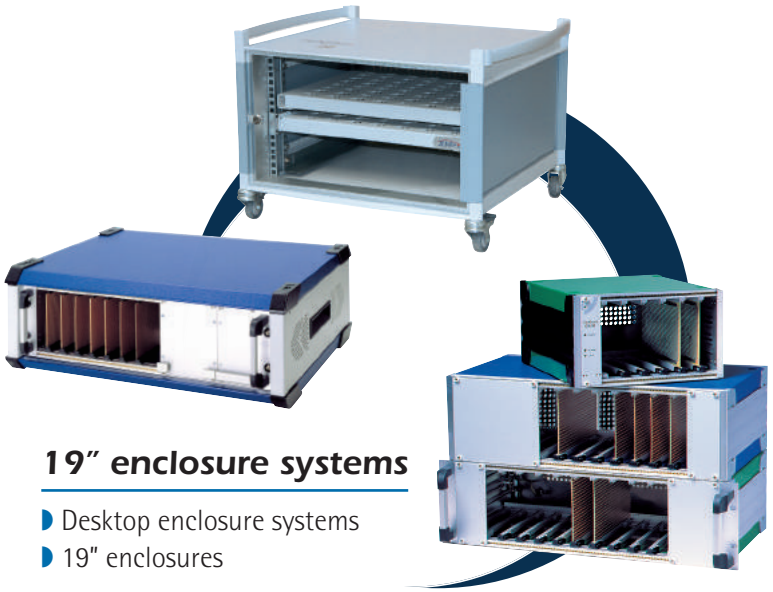

19″ enclosure systems

- Desktop enclosure systems
- 19″ enclosures

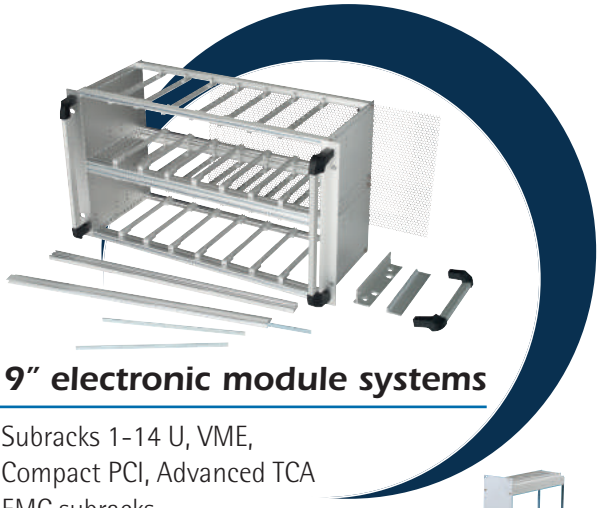

19″ electronic module systems

- Subracks 1-14 U, VME, Compact PCI, Advanced TCA
- EMC subracks
- Customer-specific subracks
- Cassettes, plug-in modules, partial front panels



www.apra.de



Housing for Maker Boards

- **customized enclosures**
  for Embedded NUC, Raspberry Pi, Arduino, Banana Pi, Nano ITX, Pico ITX, Smarc, ...



Small enclosure systems

- Modem enclosures
- Profile small enclosures
- Console enclosures

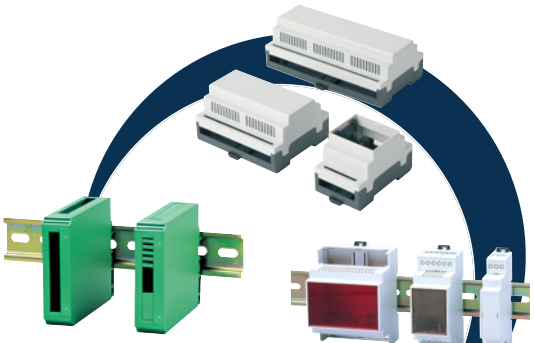

Panel instrument cases and top hat rail enclosures

- Enclosures in accordance with IEC 61554
- Plastic injection moulding
- Plastic mould construction



Plastic enclosures

- individual plastic housing without tool costs
  - even the most unusual shape and material requests are possible
    - from 1 - 100.000 pc. in different techniques
    - **3D-Printing:** Your Fast Track to Prototyping
    - **Digital printing:** fast, flexible and inexpensive
    - Front membranes and membrane keypads
    - Material mix: the perfect combination of plastic and metal



Whether it be metal or plastic, standard or customer-specific - we can help you plan the optimum shell for your valuable electronics. Contact us to find out more!



www.apra.de

A holistic approach

With our expertise and ultra-modern machinery, we can develop, produce and assemble the perfect enclosure for you.

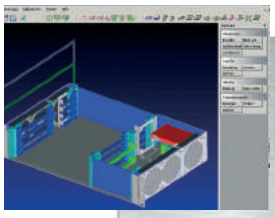

1. DEVELOPMENT

- 3D design
- Construction
- Testing and simulation (EMC, IP, trial, etc.)
- Consulting and technical support

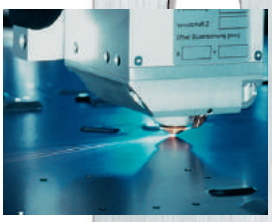

2. PUNCHING/ PRESSING TECHNOLOGY

- Laser cutting
- Punching/pressing
- Imprinting



3. BENDING TECHNOLOGY

- Robot-supported bending
- Crimping
- Deposit



4. PLASTICS PROCESSING

- Milling and bending technology
- Vacuum casting technology (SYN-PRO tech)
- Cast moulding technology (GIEFO tech)
- Injection moulding
- Rapid prototyping

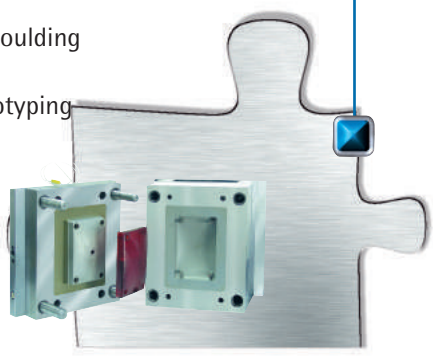

www.apra.de

to production

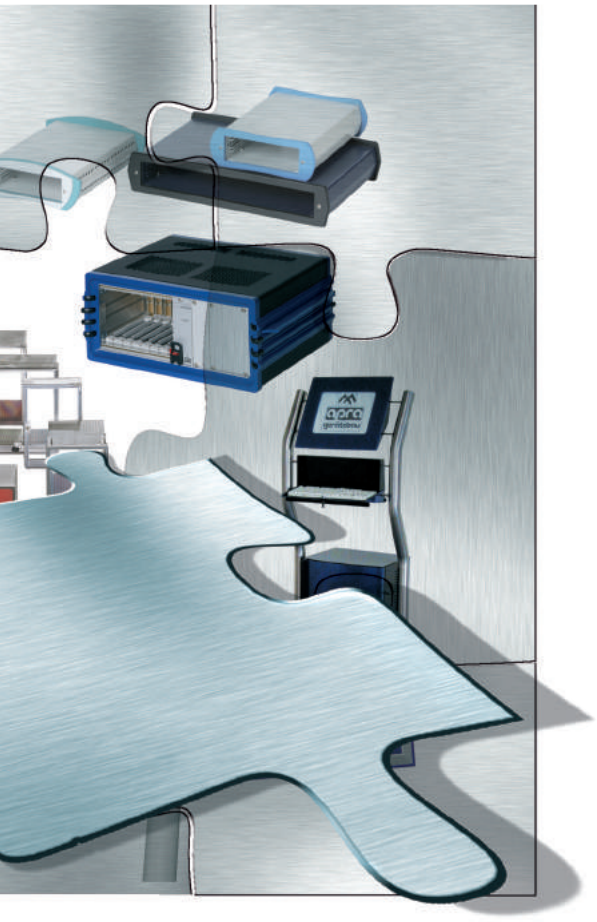

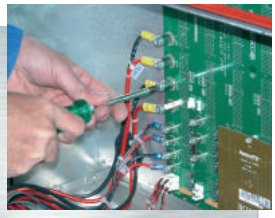

8. ASSEMBLY

- Assembly service
- Pre-wiring
- Cable configuration
- System integration



7. LABELLING

- Screen printing
- Digital printing
- Pad printing
- Sub-eloxal printing
- Films and membrane keypads

5. JOINTING TECHNOLOGY

- Robot-supported welding
- Press-fitting
- Pressure joining
- Riveting

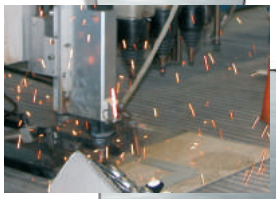



6. SURFACE TECHNOLOGY

- Powder coating
- Wet painting
- Chromating
- Conductive paint coating
- Nano paint coating

IP protection classes in accordance with DIN EN 60529

In order to ensure reliable operation, all electronic devices and systems must be protected against possible interference. Enclosures and/or cabinets must therefore fulfil certain protection requirements depending on the area of application. These requirements are specified in the standards DIN EN 60529 with IP protection classes (IP = international protection). They indicate the capacity of an enclosure to protect installed components against contact and the ingress of foreign bodies and water.

The first digit of the IP protection class defines the degree of protection against contact and foreign bodies, while the second digit indicates the degree of water protection. The table below shows the meaning of the individual numbers

IP 43

- 4 – Protection against spray up to 60° to the vertical
- 3 – Protection against contact with tools, foreign bodies and wires, diameters greater than 1 mm

Degrees of protection in accordance with DIN EN 60529

Protection against contact and foreign bodies			Protection against ingress of water	
First digit	Contact	Foreign bodies	Second digit	Contact
0	No protection	No protection	0	No protection
1	Protection against contact with larger body parts	Protection against large Foreign bodies, diameters greater than 50 mm 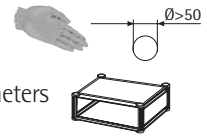	1	Protection against water dripping vertically 
2	Protection against finger contact	Protection against medium-size foreign bodies, diameter greater than 12.5 mm 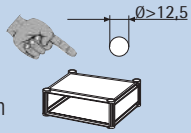	2	Protection against water dripping at an enclosure angle up to 15° to the vertical 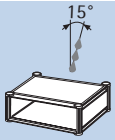
3	Protection against contact with tools and wires, diameters greater than 2.5 mm	Protection against small foreign bodies, diameter greater than 2.5 mm 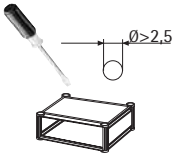	3	Protection against spray up to 60° to the vertical 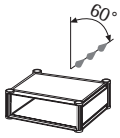
4	Protection against contact with tools and wires, diameters greater than 1 mm	Protection against granular impurities, diameter greater than 1 mm 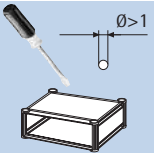	4	Protection against splash water from any direction 
5	Full protection	Protection against harmful dust deposits 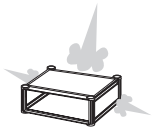	5	Protection against jet water from any direction 
6	Full protection	Protection against dust entry 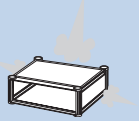	6	Protection against heavy jet water from any direction 
			7	Protection when temporarily immersed in water 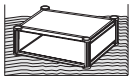
			8	Protection when immersed in water for an extended period 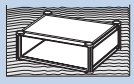

www.apra.de

Certification

The apra Group relies on innovative products of high quality, which form the basis of the continually growing corporate group.
A sound quality and environmental management system is a prerequisite for this.

Independent proof of this system is provided by means of a certificate issued when a company can prove by means of an audit that all requirements arising from the DIN standard have been met.

One of these requirements is, for example, that all processes are documented clearly, transparently and in full.

The apra Group can produce proof of certification of its quality and environmental management system for all locations.

DIN EN ISO 9001:2015 is a standard that regulates the selection and installation of a quality management system within a company.

DIN EN ISO 14001:2015 is the environmental standard. It is awarded when a company complies with all environmental aspects.

The management systems described in a management manual for quality and the environment set out all organisational measures to ensure that all products comply with the rules and regulations to be applied as agreed and function as intended during operation.

The apra Group undertakes to comply with the environmental requirements and to continuously improve its environmental protection. Compliance with the environmental protection policy is monitored regularly.

The certificates issued are checked annually by TÜV to ensure they are valid.

A quality management system certified in accordance with the standard proves to the customer that the supplier will deliver good products in compliance with its own rules.

These certificates significantly reduce the cost for the verification of suppliers and customers on both sides.



Approvals

Verein Deutscher Elektrotechniker	Underwriters Laboratories
Conformité Européenne	Canadian Standards Association
Geprüfte Sicherheit	Technischer Überwachungsverein

The companies of the apra group

apra-norm Elektromechanik GmbH
Bei der untersten Mühle 5 · D-54552 Mehren/Vulkaneifel
Phone: +49 (0) 65 92 / 20 4-0 · Fax: 20 4-100
sales@apra.de · www.apra.de

apraNET Geschäftsbereich Netzwerktechnik der apra-norm Elektromechanik GmbH
Bei der untersten Mühle 5 · D-54552 Mehren/Vulkaneifel
Phone: +49 (0) 65 92 / 204-200 · Fax: 204-250
vertrieb@apranet.de · www.apra.de

apra-plast Kunststoffgehäuse-Systeme GmbH
Hamsterweg 9 · D-54550 Daun-Pützborn
Phone: +49 (0) 65 92 / 95 02-0 · Fax: 95 02-10
vertrieb@apra-plast.de · www.apra.de

apra-gerätebau GmbH Chemnitz
Südstraße 15 · Gewerbegebiet Süd
D-09221 Neukirchen
Phone: +49 (0) 371 / 28 12 4-0 · Fax: 28 12 4-20
vertrieb@apra-geraetebau.de · www.apra.de

apra-norm Elektromechanik GmbH
Abteilung radaplast: Spritzguss und Werkzeugbau
Hamsterweg 7 · D-54550 Daun-Pützborn
Phone: +49 (0) 65 92 / 20 4-0 · Fax: 204-100
sales@apra.de · www.apra.de

apra-optinet Sp. z o.o.
ul. Technologiczna 4/6 · PL-45-839 Opole
Phone: 00 48 (0) 77 415 0 107 · Fax: 00 48 (0) 77 415 0 161
sales@apra-optinet.pl · www.apra-optinet.pl

apra-norm s.n.c.
ZA de l'aérodrome
4, rue Clément Ader · F-67500 Haguenau
Phone: 00 33 (0) 3 88 93 96 96 · Fax: 00 33 (0) 3 88 93 96 92
commercial@apra-norm.fr · www.apra-norm.fr

Your Contact

www.apra.de